3

SEISMIC STRENGTHENING OF EXISTING BUILDINGS

3.0 INTRODUCTION

The life-safety hazard posed a building found to be vulnerable to earthquake ground motion can be mitigated in several ways: the building can be condemned and demolished or strengthened or otherwise modified to increase its capacity or the seismic demand on the building can be reduced. Structural rehabilitation or strengthening of a building can be accomplished in a variety of ways, each with specific merits and limitations related to the unique characteristics of the building.

This chapter focuses on the structural considerations of seismic strengthening or upgrading; however, it must be remembered that other factors may influence or even dictate which technique is most appropriate for an individual building. Recommendations for enhancing the seismic resistance of existing structures by eliminating or reducing the adverse effects of design or construction features were presented in Chapter 2. Cost, function, aesthetic, and seismic zone considerations that also influence the selection of a strengthening technique are reviewed briefly below and are elaborated on in the remaining sections if this chapter. It should be noted, however, that seismic strengthening may trigger application of other building rehabilitation requirements such as those related to handicap access, asbestos, fire sprinklers, fire resistance, and egress.

3.0.1 COST CONSIDERATIONS

Cost is very important and often may be the only criterion applied when choosing among equivalent strengthening options. When using relative costs to evaluate two or more feasible strengthening or rehabilitation alternatives, it is important to consider all applicable costs. For example, an existing steel frame building, with steel floor and roof decking and vertical bracing in the exterior walls may have inadequate seismic shear capacity in the diaphragms and vertical bracing. Although it may be feasible to increase the capacity of the existing diaphragms and the bracing, it may be more cost-effective to add bracing to the interior frames to reduce the diaphragm shears to an allowable level. If additional bracing can be installed without additional foundations and without adverse effects on the functional use of the building, it may be significantly more economical than any of the diaphragm strengthening techniques.

3.0.2 FUNCTIONAL CONSIDERATIONS

Most buildings are intended to serve one or more functional purposes (e.g., to provide housing or to enclose a commercial or industrial activity). Since the functional requirements are essential to the effective use of the building, extreme care must be exercised in the planning and design of structural modifications to ensure that the modifications will not seriously impair the functional use. For example, if new shear walls or vertical concentrically braced frames are required, they must be located to minimize any adverse effect on access, egress, or functional circulation within the building. When considering alternative structural modifications for an existing building with an ongoing function, the degree to which construction of the proposed alternative will disrupt that function also must be considered in assessing cost-effectiveness.

3.0.3 AESTHETIC CONSIDERATIONS

In some cases, the preservation of aesthetic features can significantly influence the selection of a strengthening technique. Historical buildings, for example, may require inconspicuous strengthening designed to preserve historical structural or nonstructural features. Other buildings may have attractive or architecturally significant facades, entrances, fenestration, or ornamentation that require preservation.

A decrease in natural light caused by the filling in of window or skylight openings or the installation of bracing in front of these openings may have an adverse effect on the occupants of the building. Also, the need for preservation of existing architectural features may dictate the location and configuration of the new bracing system. In many such cases, the engineer may not be able to assign an appropriate value to these subjective considerations; however, any additional costs involved in preserving aesthetic features can be identified so that the building owner can make an informed decision.

3.0.4 SEISMIC RISK

The *NEHRP Recommended Provisions* contains seismic zonation maps that divide the United States into seven seismic zones ranging from effective seismic accelerations of 0.05*g* to 0.40*g*. Seismic strengthening may be required for older structures built before the advent of seismic codes or built under less stringent requirements (i.e., seismic force levels in most codes have escalated and the seismic zoning in many areas has been revised upward). However, since these structures were designed for and have been tested over time by vertical loads and wind forces, it is safe to assume that they have some inherent capacity for resisting seismic forces.* Obviously, older existing structures located in a lower seismic zone have a higher probability of requiring little or no strengthening than do similar structures in a higher zone. Further, some strengthening techniques for existing structures with moderate seismic deficiencies in the lower seismic zones are not appropriate for use in higher zones.

In lower seismic zones it sometimes can be demonstrated that a building does not require seismic strengthening because it can resist wind loads in excess of the code-prescribed seismic forces. For other buildings in low seismicity zones, more detailed structural evaluations may be warranted if there is a probability that the seismic adequacy of the structure can be demonstrated.

3.1 VERTICAL-RESISTING ELEMENTS--MOMENT RESISTING SYSTEMS*

Moment resisting systems are vertical elements that resist lateral loads primarily through flexure. There are four principal types of moment resisting systems: steel moment frames, concrete moment frames, precast concrete moment frames; and moment frames with infill walls.

3.1.1 STEEL MOMENT FRAMES

3.1.1.1 Deficiencies

The principal seismic deficiencies in steel moment frames are:*

- Inadequate moment/shear capacity of beams, columns, or their connections;
- Inadequate beam/column panel zone capacity; and
- Excessive drift.

---

*The American Iron and Steel Institute has written a minority opinion concerning the footnoted sentence in Sec. 3.0.4 and the organization of Sec. 3.1 and the American Institute of Steel Construction has written a minority opinion concerning the first sentence in Sec. 3.1.1.1; see page 193.

3.1.1.2 Strengthening Techniques for Inadequate Moment/Shear Capacity of Beams, Columns, or Their Connections

Techniques. Deficient moment/shear capacity of the beams, columns, or the connections of steel moment frames can be improved by:

1. Increasing the moment capacity of the members and connections by adding cover plates or other steel sections to the flanges (Figure 3.1.1.2a) or by boxing members (Figure 3.1.1.2b).

2. Increasing the moment/shear capacity of the members and connections by providing steel gusset plates or knee braces.

3. Reducing the stresses in the existing frames by providing supplemental vertical-resisting elements (i.e., additional moment frames, braces, or shear walls) as discussed in Sec. 3.4.

4. Providing lateral bracing of unsupported flanges to increase capacity limited by tendency for lateral/torsional buckling.

5. Encasing the columns in concrete.

Relative Merits. If the existing steel frame members are inaccessible (e.g., they are covered with architectural cladding), Techniques 1 and 2 usually are not cost-effective. The majority of the columns, beams, and connections would need to be exposed; significant reinforcement of the connections and members would be required, and the architectural cladding would have to be repaired. Reducing the moment stresses by providing supplemental resisting elements (Technique 3) usually will be the most cost-effective approach. Providing additional moment frames (e.g., in a building with moment frames only at the perimeter, selected interior frames can be modified to become moment frames as indicated in Figure 3.1.1.2a) reduces stresses on the existing moment frames. Providing supplemental bracing or shear walls also can reduce frame stresses. Concentric frames and bracing may pose relative rigidity problems where a rigid diaphragm is present. Shear walls have the additional disadvantage of requiring additions to or modifications of the existing foundations. The addition of eccentric bracing may be an efficient and cost-effective technique to increase the lateral load capacity of the deficient frame provided existing beam sizes are appropriate. In addition to being compatible with the rigidity of the moment

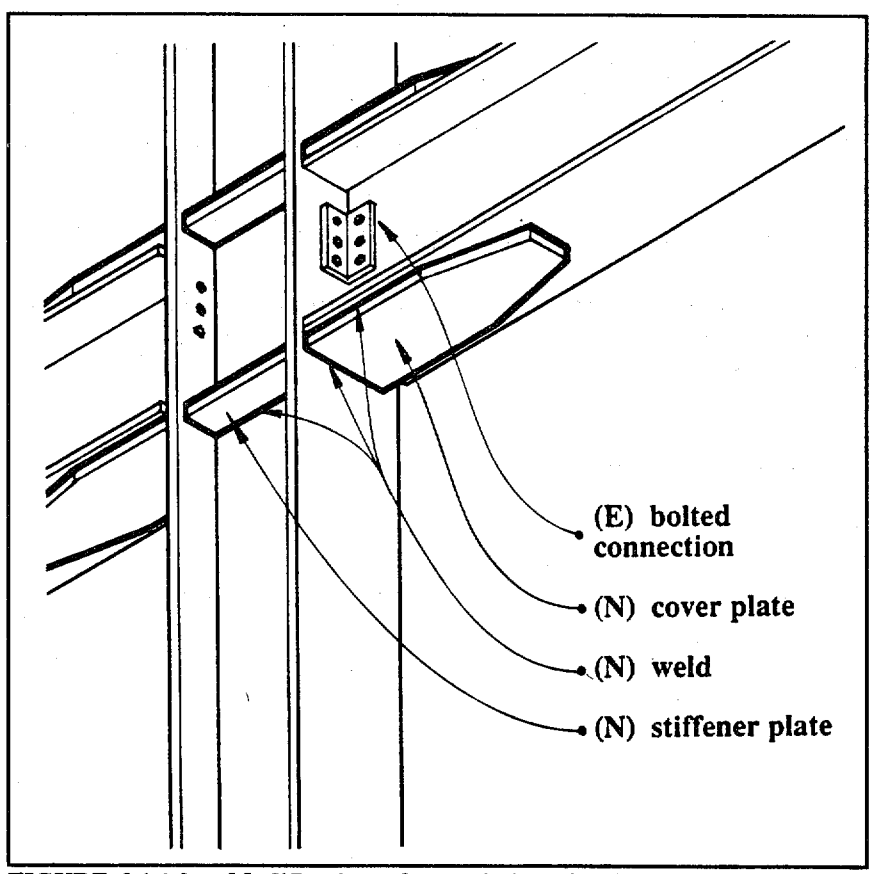

FIGURE 3.1.1.2a Modification of an existing simple beam to a moment connection.

frames, eccentric bracing has the advantage of being more adaptable than concentric bracing or shear walls in avoiding the obstruction of existing door and window openings.

If architectural cladding is not a concern, reinforcement of existing members (Technique 1) may be practical. The addition of cover plates to beam flanges (Figure 3.1.1.2a) can increase the moment capacity of the existing connection, and the capacity of columns can be increased by boxing (Figure 3.1.1.2b). Since the capacity of a column is determined by the interaction of axial plus bending stresses, the addition of box plates increases the axial capacity, thus permitting the column a greater bending capacity. Cover or box plates also may increase the moment capacity of the columns at the base and thereby require that the foundation capacity also be increased.

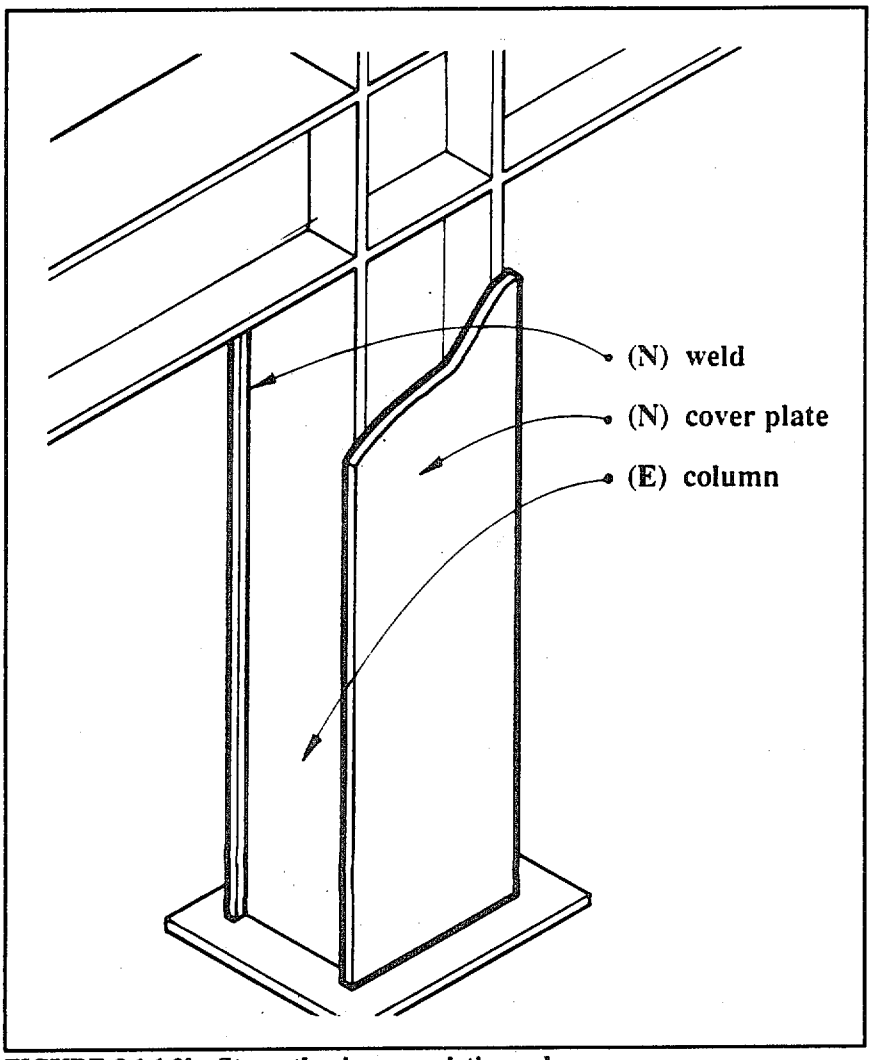

FIGURE 3.1.1.2b Strengthening an existing column.

Increasing the moment capacity of columns with cover plates at the beam/column connection usually is not feasible because of the interference of the connecting beams. The addition of flanged gussets to form haunches below and/or above the beam or the use of knee braces (Technique 2) may be effective for increasing the moment capacity of a deficient moment frame. The effects of the haunches or knee braces will require a re-analysis of the frame and the designer must investigate the stresses and the need for lateral bracing at the interface between the gusset or brace and the beam or column.

In many cases, it may not be feasible to increase the capacity of existing beams by providing cover plates on the top flange because of interference with the floor beams, slabs, or metal decking. (Note that for a bare steel beam, a cover plate on only the lower flange may not significantly reduce the stress in the upper flange.) However, if an existing concrete slab is adequately reinforced and detailed for composite action at the end of the beam, it may be economically feasible to increase the moment capacity by providing cover plates on the lower flanges at each end of the beam. Cover plates should be tapered as shown in Figure 3.1.1.2c to avoid an abrupt change in section modulus beyond the point where the additional section modulus is required. Where composite action is not an alternative, increasing the top flange thickness can be achieved by adding tapered plates to the sides of the top flange and butt-welding these plates to the beam and column flanges.

In some cases the capacity of steel beams in rigid frames may be governed by lateral stability considerations. Although the upper flange may be supported for positive moments by the floor or roof system, the lower flange must be checked for compression stability in regions of negative moments. If required, the necessary lateral support may be provided by diagonal braces to the floor system.

Encasing the columns in concrete (Technique 5) can increase column shear capacity in addition to increasing stiffness. This alternative may be cost-effective when both excessive drift and inadequate column shear capacity need to be addressed.

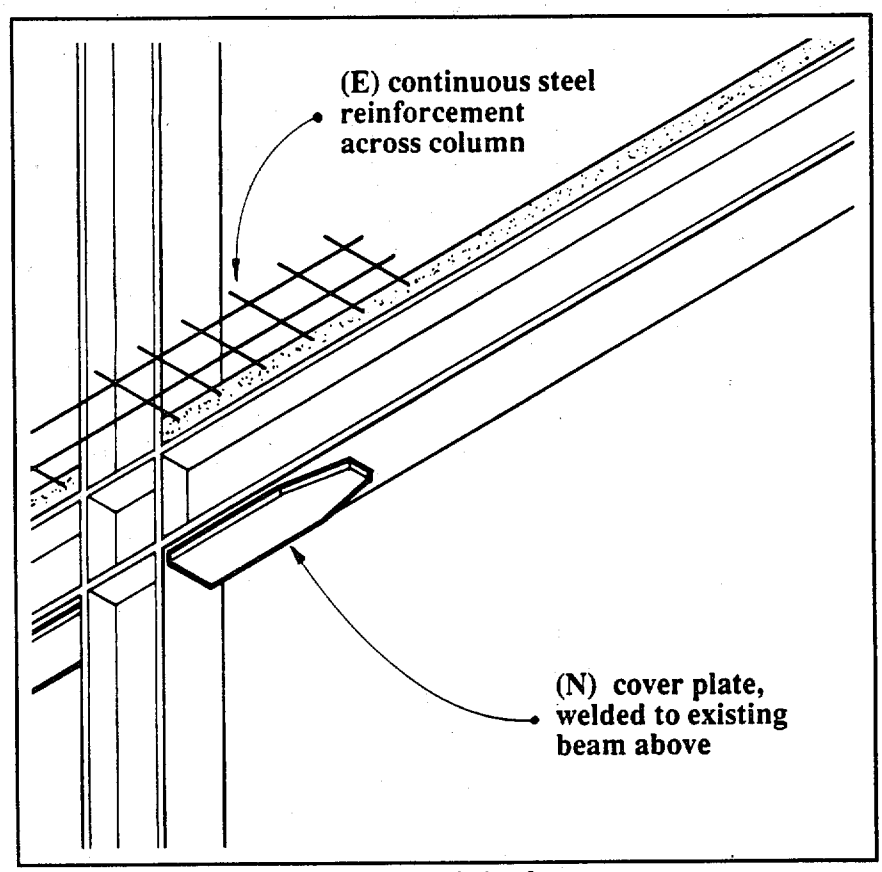

FIGURE 3.1.1.2c Strengthening an existing beam.

3.1.1.3 Strengthening Techniques for Inadequate Panel Zone Capacity

Techniques. Beam/column panel zones can be overstressed due to seismic forces if the tensile capacity in the column web opposite the beam flange connection is inadequate (i.e., tearing of the column web), if the stiffness of the column flange where beam flange or moment plate weld occurs is inadequate (i.e., lateral bowing of the column flange), if the capacity for compressive forces in the column web is inadequate (i.e., web crippling or buckling of the column web opposite the compression flange of the connecting beam), or if there is inadequate shear capacity in the column flange (i.e., shear yielding or buckling of the column web). Deficient panel zones can be improved by:

1. Providing welded continuity plates between the column flanges.

2. Providing stiffener plates welded to the column flanges and web.

3. Providing web doubler plates at the column web.

4. Reducing the stresses in the panel zone by providing supplemental vertical-resisting elements (i.e., additional moment frames, braces, or shear walls) as discussed in Sec. 3.4.

Relative Merits. Technique 2 (i.e., adding stiffener plates to the panel zone) usually is the most cost-effective alternative. It should be noted that this technique corrects three of the four deficiencies identified above. Also, by confining the column web in the panel zone, shear buckling is precluded and shear yielding in the confined zone may be beneficial by providing supplemental damping. The cost for removal and replacement of existing architectural cladding and fireproofing associated with these alternatives needs to be considered in assessing cost-effectiveness.

3.1.1.4 Techniques for Reducing Drift

Techniques. Drift of steel moment frames can be reduced by:

1. Increasing the capacity and, hence, the stiffness of the existing moment frame by cover plates or boxing.

2. Increasing the stiffness of the beams and columns at their connections by providing steel gusset plates to form haunches.

3. Reducing the drift by providing supplemental vertical-resisting elements (i.e., additional moment frames, braces, or shear walls) as discussed in Sec. 3.4.

4. Increasing the stiffness by encasing columns in reinforced concrete.

5. Reducing the drift by adding supplemental damping as discussed in Sec. 4.

Relative Merits. Excessive drift generally is a concern in the control of seismic damage; however, for steel frames, there also may be cause for concern regarding overall frame stability. If the concern is excessive drift and not frame capacity, the most cost-effective alternative typically is increasing the rigidity of the frame by the addition of bracing or shear walls. However, increasing the rigidity of the frame also may increase the demand load by lowering the fundamental period of vibration of the structure, and this potential adverse effect must be assessed.

Providing steel gusset plates (Technique 2) to increase stiffness and reduce drift may be cost-effective in some cases. This technique however, must be used with caution since new members may increase column bending stresses and increase the chance for a nonductile failure. Thus, column and beam stresses must be checked where beams and columns interface with gussets and column stability under a lateral displacement associated with the design earthquake should be verified.

Increasing the stiffness of steel columns by encasement in concrete (Technique 4) may be an alternative for reducing drift in certain cases. The principal contributing element to excessive story drift typically is beam flexibility; hence, column concrete encasement will be only partially effective and is therefore only cost-effective when a building has relatively stiff beams and flexible columns.

Reducing drift by adding supplemental damping is an alternative that is now being considered in some seismic rehabilitation projects. Typically, bracing elements need to be installed in the moment frame so that discrete dampers can be located between the flexible moment frame elements and the stiff bracing elements. This alternative is further discussed in Sec. 4.3.2.

3.1.2 CONCRETE MOMENT FRAMES

3.1.2.1 Deficiency

The principal deficiency in concrete moment frames is inadequate ductile bending or shear capacity in the beams or columns and lack of confinement, frequently in the joints.

3.1.2.2 Strengthening Techniques for Deficiency in Concrete Moment Frames

Techniques. Deficient bending and shear capacity of concrete moment frames can be improved by:

1. Increasing the ductility and capacity by jacketing the beam and column joints or increasing the beam or column capacities (Figures 3.1.2.2a and 3.1.2.2b).

2. Reducing the seismic stresses in the existing frames by providing supplemental vertical-resisting elements (i.e., additional moment frames, braces, or shear walls) as discussed in Sec. 3.4.

3. Changing the system to a shear wall system by infilling the reinforced concrete frames with reinforced concrete (Figure 3.1.2.2c).

Relative Merits. Improving the ductility and strength of concrete frames by jacketing (Technique 1) generally is not cost-effective because of the difficulty associated with providing the necessary confinement and shear reinforcement in the beams, columns, and beam-column connection zones. When deficiencies are identified in these frames, it will probably be more cost-effective to consider adding reinforced concrete shear walls (Technique 2) or filling in the frames with reinforced concrete (Technique 3). Either of these alternatives will tend to make the frames ineffective for lateral loads. This is because the greater rigidity of the walls will increase the percentage of the lateral load to be resisted by the walls, (i.e., lateral forces will be attracted away from the relatively flexible moment frames and into the more rigid walls). This is especially true for buildings with rigid diaphragms. These alternatives also typically will require upgrading of the foundations, which may be costly. The decision regarding whether the new walls should be in the interior of the building or at its perimeter or exterior buttresses usually will depend on nonstructural considerations such as aesthetics and disruption or obstruction of the functional use of the building.

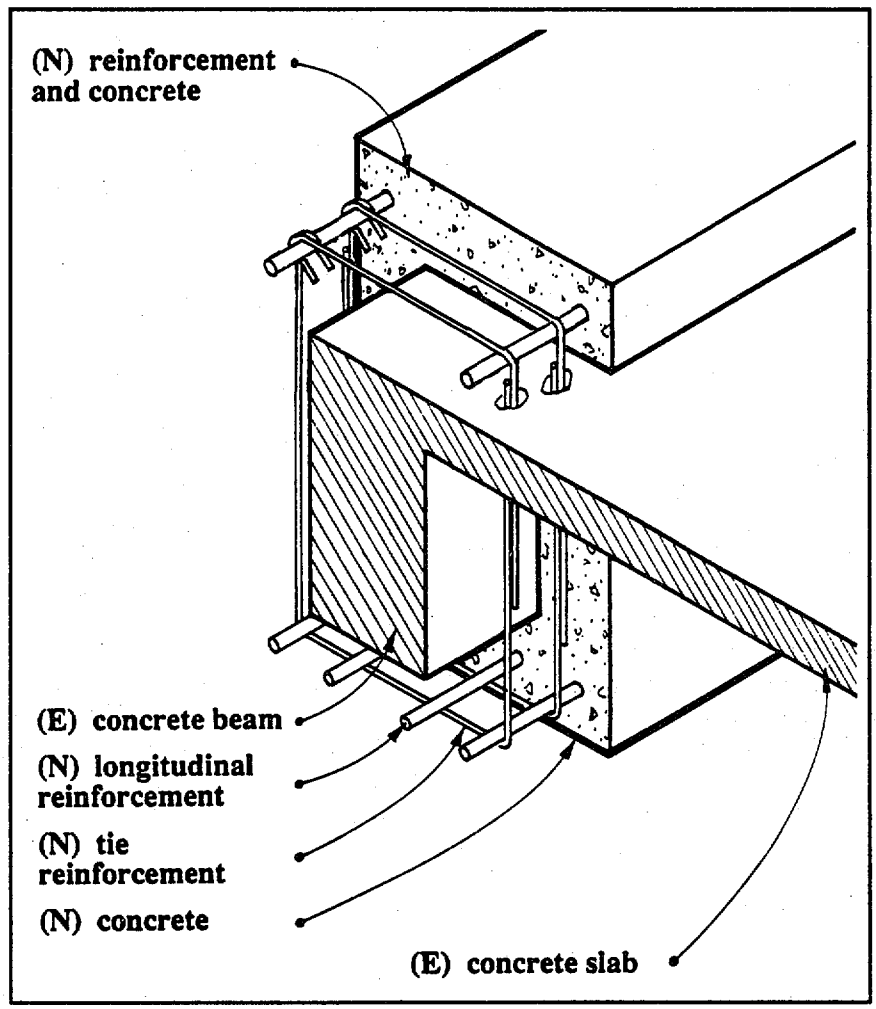

FIGURE 3.1.2.2a Encasing an existing beam in concrete.

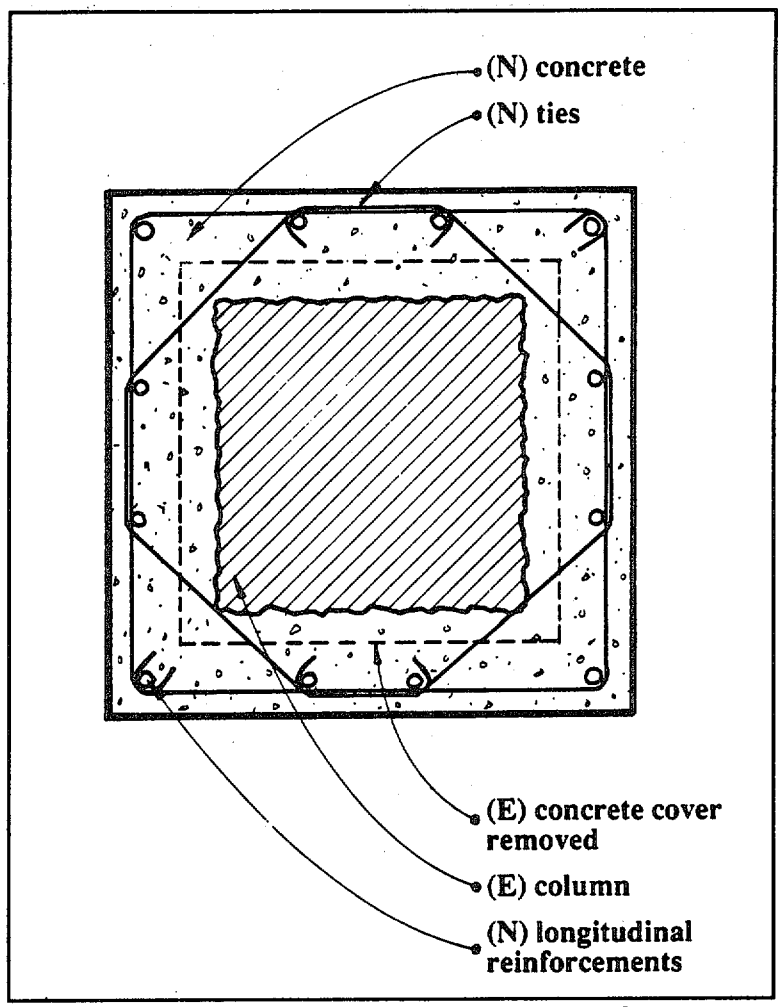

Figure 3.1.2.2b Strengthening an existing concrete column.

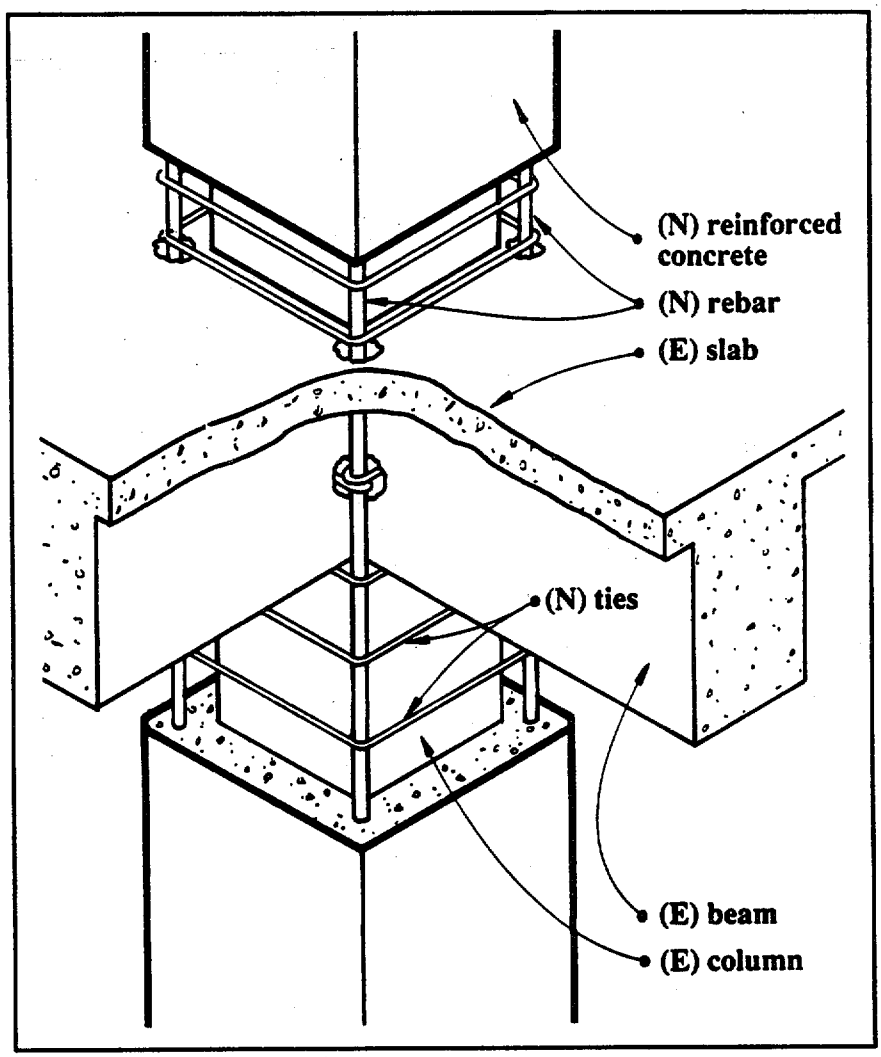

FIGURE 3.1.2.2b continued.

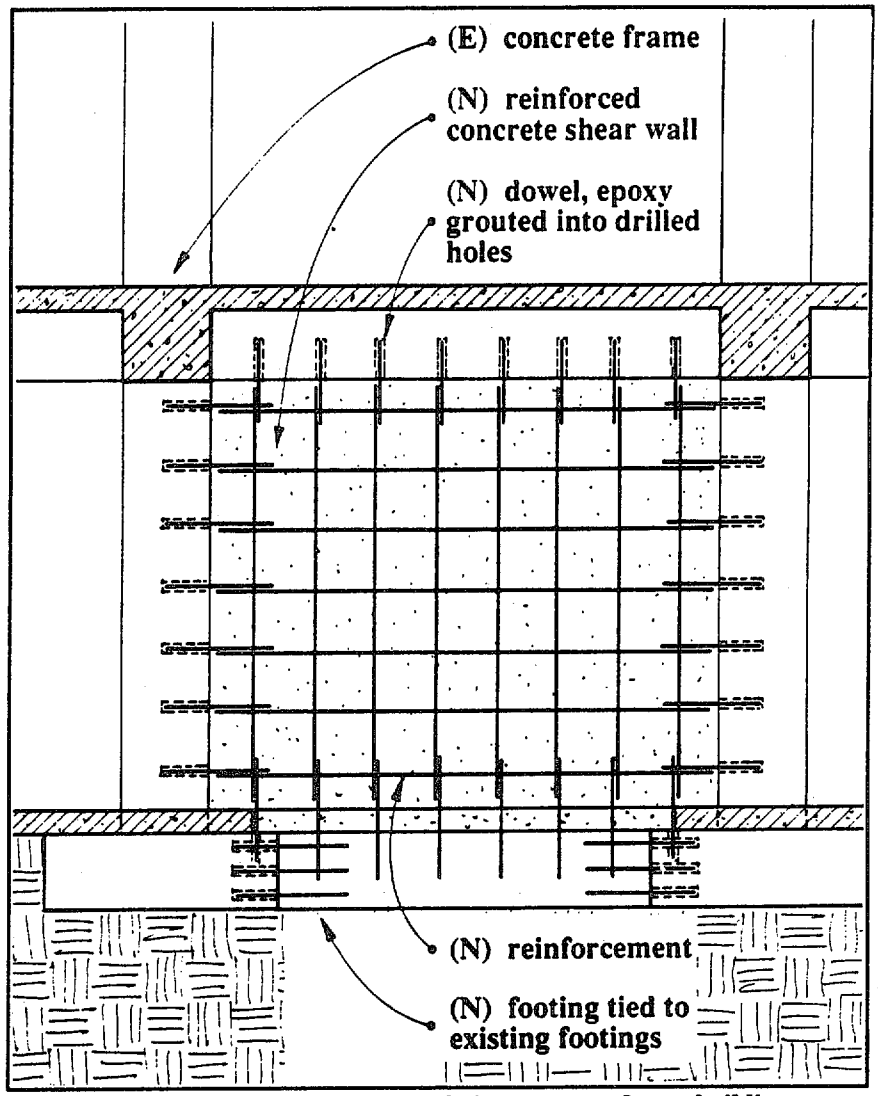

FIGURE 3.1.2.2c Strengthening an existing concrete frame building with a reinforced concrete shear wall.

3.1.3 MOMENT FRAMES WITH INFILLS

3.1.3.1 Deficiencies

When reinforced concrete or steel moment frames are completely infilled, the frame action may be inhibited by the rigidity of the infill wall. Rigid infill walls (e.g., reinforced concrete, reinforced masonry, or clay tile) will resist lateral forces predominantly as shear walls and the frames will be relatively ineffective. Reinforced concrete or steel frames completely infilled with less rigid walls (e.g., unreinforced masonry) will tend to resist lateral forces as braced frames with a diagonal compression "strut" forming in the infill. The principal deficiencies in moment frames with infill walls are:

- Crushing of the infill at the upper and lower corners due to the diagonal compression strut type action of the infill wall,

- Shear failure of the beam/column connection in the steel frames or direct shear transfer failure of the beam or column in concrete frames,

- Tensile failure of the columns or their connections due to the uplift forces resulting from the braced frame action induced by the infill,

- Splitting of the infill due to the orthogonal tensile stresses developed in the diagonal compressive strut, and

- Loss of infill by out-of-plane forces due to loss of anchorage or excessive slenderness of the infill wall.

If the infill walls have inadequate capacity to resist the prescribed forces, the deficiencies may be corrected as described below for shear walls.

Partial height infills or infills with door or window openings also will tend to brace concrete or steel frames, but the system will resist lateral forces in a manner similar to that of a knee-braced frame. The lateral stiffness of the shortened columns is increased so that, for a given lateral displacement, a larger shear force is developed in the shortened column compared to that in a full height column. If the column is not designed for this condition, shear or flexural failure of the column could occur in addition to the other potential deficiencies indicated above for completely infilled frames.

Falling debris resulting from the failure of an existing infill wall also poses a life-safety hazard. Frames may be infilled with concrete or various types of masonry such as solid masonry, hollow clay tile, or gypsum masonry. These infills may be reinforced, partially reinforced, or unreinforced. Infills (particularly brittle unreinforced infills such as hollow clay tile or gypsum masonry) often become dislodged upon failure of the wall in shear. Once dislodged, the broken infill may fall and become a life-safety hazard. Mitigation of this hazard can be accomplished by removing the infill and replacing it with a nonstructural wall as described above. The infill can also be "basketed" by adding a constraining member such as a wire mesh. Basketing will not prevent the infill from failing but will prevent debris from falling.

In some cases, the exterior face of the infill may extend beyond the edge of the concrete or steel frame columns or beams. For example, an unreinforced brick infill in a steel frame may have one wythe of brick beyond the edge of the column or beam flange to form a uniform exterior surface. This exterior wythe is particularly vulnerable to delamination or splitting at the collar joint (i.e., the vertical mortar joint between the wythes of brick) as the infilled frame deforms in response to lateral loads. Because the in-plane deformation of completely infilled frames is very small, the potential for delamination is greater for partial infills or those with significant openings. The potential life-safety hazard for this condition should be evaluated and may be mitigated as described in the preceding paragraph.

3.1.3.2 Rehabilitation Techniques for the Infill Walls of Moment Frames

Techniques. Inadequate shear transfer of the infill walls of moment frames can be improved by:

1. Eliminating the hazardous effects of the infill by providing a gap between the infill and the frame and providing out-of-plane support.

2. Treating the infill frame as a shear wall and correcting the deficiencies as described in Sec. 3.2.

Relative Merits. If the frame, without the infill wall, has adequate capacity for the prescribed forces, the most expedient correction is to provide a resilient joint between the column, upper beam, and wall to allow the elastic deformation of the column to take place without restraint (Technique 1). This may be accomplished by cutting a gap between the wall and the column and the upper beam and filling it with resilient material (out-of-plane restraint of the infill still must be provided) or by removing the infill wall and replacing it with a nonstructural wall that will not restrain the column.

If the frame has insufficient capacity for the prescribed forces without the infill, then proper connection of the infill to the frame may result in an adequate shear wall. The relative rigidities of the shear wall and moment frames in other bays must be considered when distributing the lateral loads and evaluating the wall and frame stresses.

3.1.4 PRECAST CONCRETE MOMENT FRAMES

3.1.4.1 Deficiency

The principal deficiency of precast concrete moment frames is inadequate capacity and/or ductility of the joints between the precast units.

3.1.4.2 Strengthening Techniques for the Precast Concrete Moment Frames

Techniques. Deficient capacity and ductility of the precast concrete moment frame connections can be improved by:

1. Removing existing concrete in the precast elements to expose the existing reinforcing steel, providing additional reinforcing steel welded to the existing steel (or drilled and grouted), and replacing the removed concrete with cast-in-place concrete.

2. Reducing the forces on the connections by providing supplemental vertical-resisting elements (i.e., additional moment frames, braces, or shear walls) as discussed in Sec. 3.4.

Relative Merits. Reinforcing the existing connections as indicated in Technique 1 generally is not cost-effective because of the difficulty associated with providing the necessary confinement and shear reinforcement in the connections. Providing supplemental frames or shear walls (Technique 2) generally is more cost-effective; however, the two alternatives may be utilized in combination.

3.2 VERTICAL-RESISTING ELEMENTS--SHEAR WALLS

Shear walls are structural walls designed to resist lateral forces parallel to the plane of the wall. There are four principal types of shear walls: cast-in-place reinforced concrete or masonry shear walls; precast concrete shear walls; unreinforced masonry shear walls; and shear walls in wood frame buildings.

3.2.1 REINFORCED CONCRETE OR REINFORCED MASONRY SHEAR WALLS

3.2.1.1 Deficiencies

The principal deficiencies of reinforced concrete or masonry shear walls are:

- Inadequate shear capacity,

- Inadequate flexural capacity, and

- Inadequate shear or flexural capacity in the coupling beams between shear walls or piers.

3.2.1.2 Strengthening Techniques for Shear Capacity

Techniques. Deficient shear capacity of existing reinforced concrete or reinforced masonry shear walls can be improved by:

1. Increasing the effectiveness of the existing walls by filling in door or window openings with reinforced concrete or masonry (Figures 3.2.1.2a and 3.2.1.2b).

2. Providing additional thickness to the existing walls with a poured-in-place or pneumatically applied (i.e., shotcrete) reinforced concrete overlay anchored to the inside or outside face of the existing walls (Figure 3.2.1.2c).

3. Reducing the shear or flexural stresses in the existing walls by providing supplemental vertical-resisting elements (i.e., shear walls, bracing, or external buttresses) as discussed in Sec. 3.4.

Relative Merits. Techniques 1 and 2 generally will be more economical than Technique 3, particularly if they can be accomplished without increasing existing foundations. If adequate additional capacity can be obtained by filling in selected window or door openings without impairing the functional or aesthetic aspects of the building, this alternative probably will the most economical. If this is not feasible, Technique 3 should be considered.

The optimum application of this alternative would be when adequate additional capacity could be obtained by a reinforced concrete overlay on a selected portion of the outside face of the perimeter walls without unduly impairing the functional or aesthetic qualities of the building and without the need to increase the footing. In some cases, restrictions may preclude any change in the exterior appearance of the building (e.g., a building with historical significance). In these cases, it will be necessary to consider overlays to the inside face of the exterior shear walls or to either face of interior shear walls. Obviously this is more disruptive and, thus, more costly than restricting the work to the exterior of the building. However, if the functional activities within the building are to be temporarily relocated because of other interior alterations, the cost difference between the concrete overlay to the inside face and the outside face of the building walls is reduced. In some cases, for example, when deficiencies exist in the capacity of the diaphragm chords or in the shear transfer from the diaphragm to the shear walls, there may be compelling reasons to place the overlay on the inside face and concurrently solve other problems.

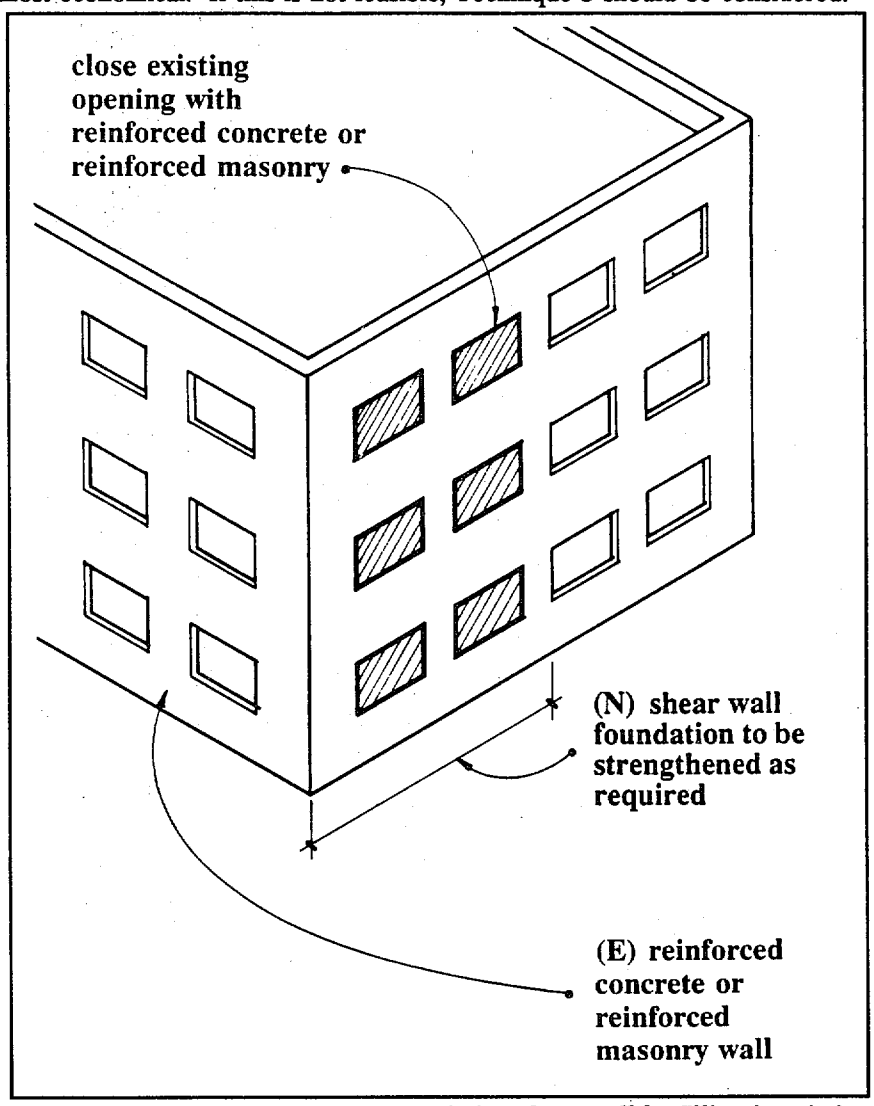

FIGURE 3.2.1.2a Strengthening an existing shear wall by filling in existing openings.

Technique 3 (i.e., providing supplemental vertical-resisting elements) usually involves construction of additional interior shear walls or exterior buttresses. This alternative generally is more expensive than the other two because of the need for new foundations and for new drag struts or other connections to collect the diaphragm shears for transfer to the new shear walls or buttresses. The foundation required to resist overturning forces

for an exterior buttress usually is significant because the dead weight of the building cannot be mobilized to resist the overturning forces. Piles or drilled piers may be required to provide tensile hold-down capacity for the footings. Buttresses located on both ends of the wall can be designed to take compression only, minimizing the foundation problems. Buttresses frequently are not feasible due to adjacent buildings or property lines. The advantages of the buttress over a new interior shear wall is that the work can be accomplished with minimal interference to ongoing building functions.

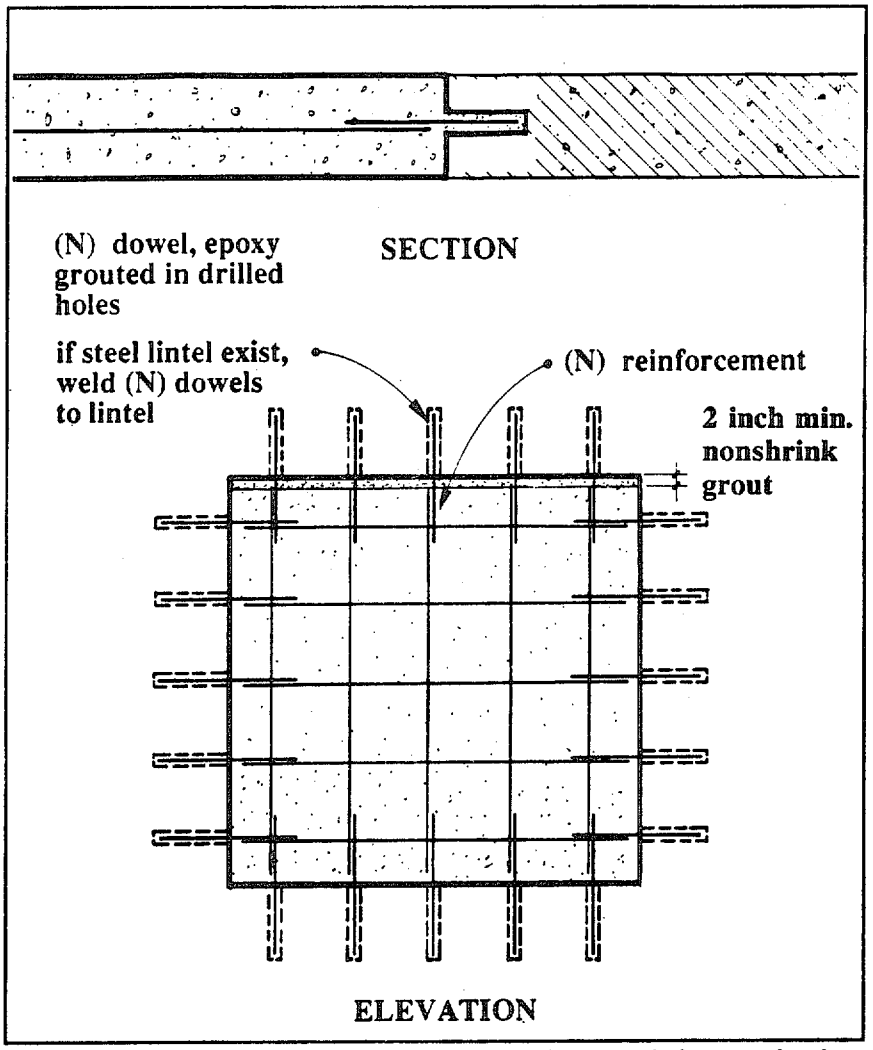

FIGURE 3.2.1.2b Example of details for enclosing an existing opening in a reinforced concrete or masonry wall.

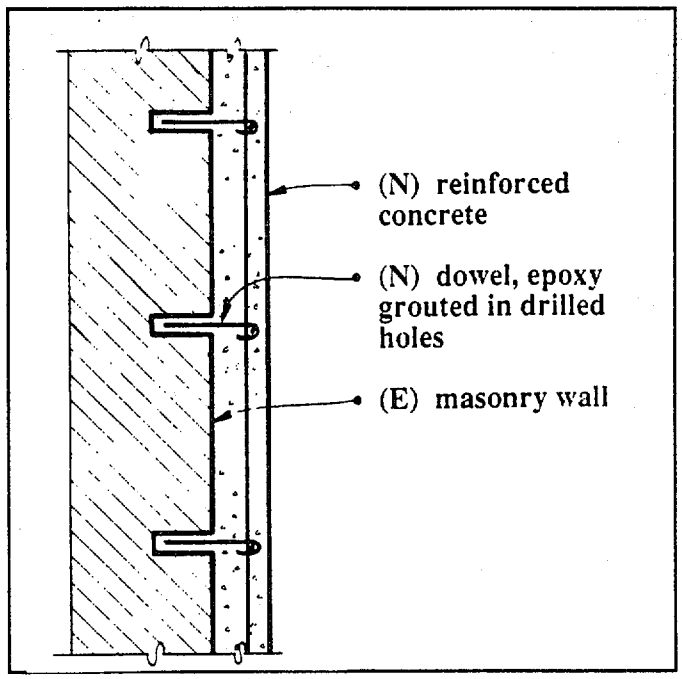

FIGURE 3.2.1.2c Strengthening an existing reinforced concrete or masonry wall.

3.2.1.3 Strengthening Technique For Flexural Capacity

Deficient flexural capacity of existing reinforced concrete or masonry shear walls can be improved using the same techniques identified to improve shear capacity, ensuring that flexural steel has adequate connection capacities into existing walls and foundations. Shear walls that yield in flexure are more ductile than those that yield in shear. Shear walls that are heavily reinforced (i.e., with a reinforcement ratio greater than about 0.005) also are more susceptible to brittle failure; therefore, care must be taken not to overdesign the flexural capacity of rehabilitated shear walls.

3.2.1.4 Rehabilitation Technique for Coupling Beams

Deficient shear or flexural capacity in coupling beams of reinforced concrete or reinforced masonry shear walls can be improved by:

1. Eliminating the coupling beams by filling in openings with reinforced concrete (Figure 3.2.1.2b).

2. Removing the existing beams and replacing with new stronger reinforced beams (Figure 3.2.1.4).

3. Adding reinforced concrete to one or both faces of the wall and providing an additional thickness to the existing wall (Figure 3.2.1.2c).

4. Reducing the shear or flexural stresses in the connecting beams by providing additional vertical-resisting elements (i.e., shear walls, bracing, or external buttresses) as discussed in Sec. 3.4.

Relative Merits. If the deficiency is in both the piers and the connecting beams, the most economical solution is likely to be the Technique 3 (i.e., adding reinforced concrete on one or both sides of the existing wall). Shallow, highly stressed connecting beams may have to be replaced with properly reinforced concrete as part of

the additional wall section. The new concrete may be formed and poured in place or may be placed by the pneumatic method.

If the identified deficiency exists only in the connecting beams, consideration should be given to acceptance of some minor damage in the form of cracking or spalling by repeating the structural evaluation with the deficient beams modeled as pin-ended links between the piers. If this condition is unacceptable, Technique 2 may be the most economical and the beams should be removed and replaced with properly designed reinforced concrete.

Depending on functional and architectural as well as structural considerations, Technique 1 (i.e., filling in selected openings) may be practical. If Techniques 1 through 3 are not feasible or adequate to ensure the proper performance of the wall, reducing the stresses by adding supplemental new structural elements (Technique 4) should be considered. This alternative is likely to be the most costly because of the need for new foundations, vertical members, and collectors.

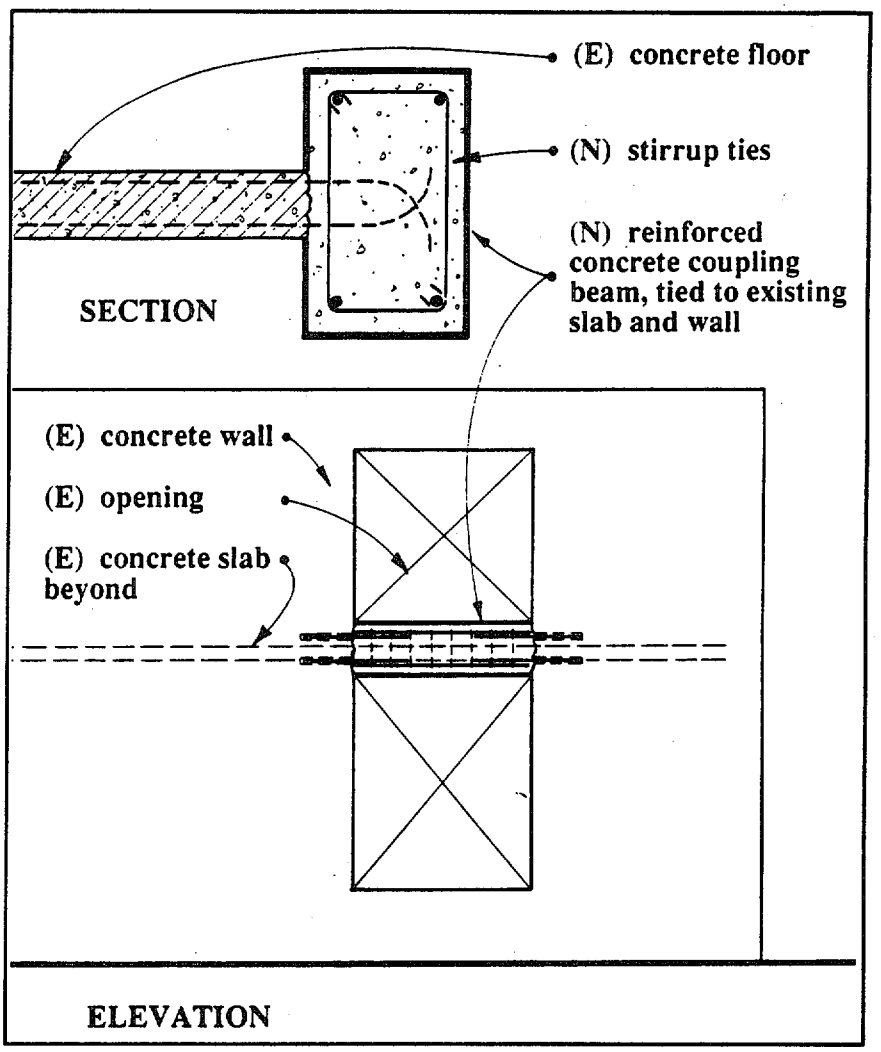

FIGURE 3.2.1.4 Example of strengthening an existing coupling beam at an exterior wall.

3.2.2 PRECAST CONCRETE SHEAR WALLS

3.2.2.1 Deficiencies

The principal deficiencies of precast concrete shear walls are:

- Inadequate shear or flexural capacity in the wall panels,
- Inadequate interpanel shear or flexural capacity,
- Inadequate out-of-plane flexural capacity, and
- Inadequate shear or flexural capacity in coupling beams.

3.2.2.2 Strengthening Techniques for Inadequate Shear or Flexural Capacity

Techniques. Deficient in-plane shear or flexural capacity of precast concrete panel walls can be improved by:

1. Increasing the shear and flexural capacity of walls with significant openings for doors or windows by infilling the existing openings with reinforced concrete.

2. Increasing the shear or flexural capacity by adding reinforced concrete (poured-in-place or shotcrete) at the inside or outside face of the existing walls.

3. Adding interior shear walls to reduce the flexural or shear stress in the existing precast panels.

Relative Merits. Precast concrete shear walls generally only have high in-plane shear or flexure stress when there are large openings in the wall and the entire shear force tributary to the wall is carried by a few panels. The most cost-effective solution generally is to infill some of the openings with reinforced concrete (Technique 1). In the case of inadequate interpanel shear capacity, the panels will act independently and can have inadequate flexural capacity. Improving the connection capacity between panels can improve the overall wall capacity. Techniques 2 and 3 generally not cost-effective unless a significant overstress condition exists.

3.2.2.3 Strengthening Techniques for Inadequate Interpanel Capacity

Techniques. Deficient interpanel shear connection capacity of precast concrete wall panels can be improved by:

1. Making each panel act as a cantilever to resist in-plane forces (this may be accomplished by adding or strengthening tie-downs, edge reinforcement, footings, etc.).

2. Providing a continuous wall by exposing the reinforcing steel in the edges of adjacent units, adding ties, and repairing with concrete.

Relative Merits. The two techniques can be equally effective. Where operational and aesthetic requirements for the space can accommodate the installation of tie-downs and possibly surface-mounted wall edge reinforcement that will make each panel act as a cantilever is a cost-effective way to compensate for inadequate interpanel capacity. Where this is not acceptable, creating a continuous wall by exposing horizontal reinforcing steel and weld-splicing them across panel joints is a viable, although more costly, option. A commonly used technique to increase interpanel capacity is to bolt steel plates across panel joints; however, observations of earthquake damage indicate this technique may not perform acceptably due to insufficient ductility and its use is not recommended.

3.2.2.4 Strengthening Techniques for Inadequate Out-of-Plane Flexural Capacity

Techniques. Deficient out-of-plane flexural capacity of precast concrete shear walls can be by:

1. Providing pilasters at and/or in-between the interpanel joints.

2. Adding horizontal beams between the columns or pilasters at mid-height of the wall.

Relative Merits. The reinforcing in some precast concrete wall panels may be placed to handle lifting stresses without concern for seismic out-of-plane flexural stresses. A single layer of reinforcing steel, for example, may be placed adjacent to one face of the wall. If this condition exists, new and/or additional pilasters can be provided between the diaphragm and the foundation at a spacing such that the wall will adequately span horizontally between pilasters. Also, horizontal beams can be provided between the pilasters at a vertical spacing such that the wall spans vertically between the diaphragm and the horizontal beam or between the horizontal

beam and the foundation. It should be noted that the problem of inadequate out-of-plane flexural capacity often is caused by wind design, particularly in the lower seismic zones.

3.2.2.5 Strengthening Techniques for Inadequate Shear or Flexural Capacity in Coupling Beams

Techniques. Deficient shear or flexural capacity in coupling beams in precast concrete walls can be improved using the techniques identified for correcting the same condition in concrete shear walls.

Relative Merits. The relative merits of the alternatives for improving the shear or flexural capacity of connecting beams in precast concrete coupling beams are similar to those discussed in Sec. 3.2.1.4 for concrete shear walls.

3.2.3 UNREINFORCED MASONRY SHEAR WALLS

3.2.3.1 Deficiencies

Masonry walls include those constructed of solid or hollow units of brick or concrete. Hollow clay tile also is typically classified as masonry. The use of hollow tile generally has been limited to nonstructural partitions and is discussed in Sec. 5.4. Unreinforced concrete, although not classified as masonry, may be strengthened by techniques similar to those described below for masonry.

The principal deficiencies of unreinforced masonry shear walls are:

- Inadequate in-plane shear and
- Inadequate out-of-plane flexural capacity of the walls.

A secondary deficiency is inadequate shear or flexural capacity of the coupling beam.

3.2.3.2 Strengthening Techniques for Inadequate In-plane Shear and Out-of-Plane Flexural Capacity of the Walls

Techniques. Deficient in-plane shear and out-of-plane flexural capacity of unreinforced masonry walls can be improved by:

1. Providing additional shear capacity by placing reinforcing steel on the inside or outside face of the wall and applying new reinforced concrete (Figure 3.2.1.2c).
2. Providing additional capacity for only out-of-plane lateral forces by adding reinforcing steel to the wall utilizing the center coring technique (Figure 3.2.3.2).
3. Providing additional capacity for out-of-plane lateral forces by adding thin surface treatments (e.g., plaster with wire mesh and portland cement mortar) at the inside and outside face of existing walls.
4. Filling in existing window or door openings with reinforced concrete or masonry (Figures 3.2.1.2a and 3.2.1.2b).
5. Providing additional shear walls at the interior or perimeter of the building or providing external buttresses.

Relative Merits. Strengthening techniques for inadequate in-plane shear capacity are similar to those discussed above for reinforced concrete or masonry walls, but there is an important difference because of the very low allowable stresses normally permitted for unreinforced masonry. These stresses generally are based on the

ultimate strength of the masonry determined from core tests or in-situ testing. A very large safety factor commonly is used in establishing allowable shear stress because of the potential variation in workmanship and materials, particularly in masonry joints.

Research indicates that it is difficult to maintain strain compatibility between uncracked masonry and cracked reinforced concrete. As a result, when there is a significant deficiency in the in-plane shear capacity of unreinforced masonry walls, some structural engineers prefer to ignore the participation of the existing masonry, to provide out-of-plane support for the masonry, and to design the concrete overlay to resist the total in-plane shear. However, reinforced concrete shear walls may be provided in an existing building to reduce the in-plane shear stresses in the unreinforced masonry walls by redistributing the seismic forces by relative rigidities. It should be noted that this redistribution is most effective when the walls are in the same line of force and connected by a competent spandrel beam or drag strut. When the new concrete walls are not in the same line of force and when the diaphragm is relatively flexible with respect to the wall, the redistribution may be by tributary area rather than by relative rigidity and the benefit of the additional shear wall may not be entirely realized. Since new concrete shear walls can delaminate from the masonry substrate, such walls should have adequate height to thickness ratios (h/t) independent of the masonry wall.

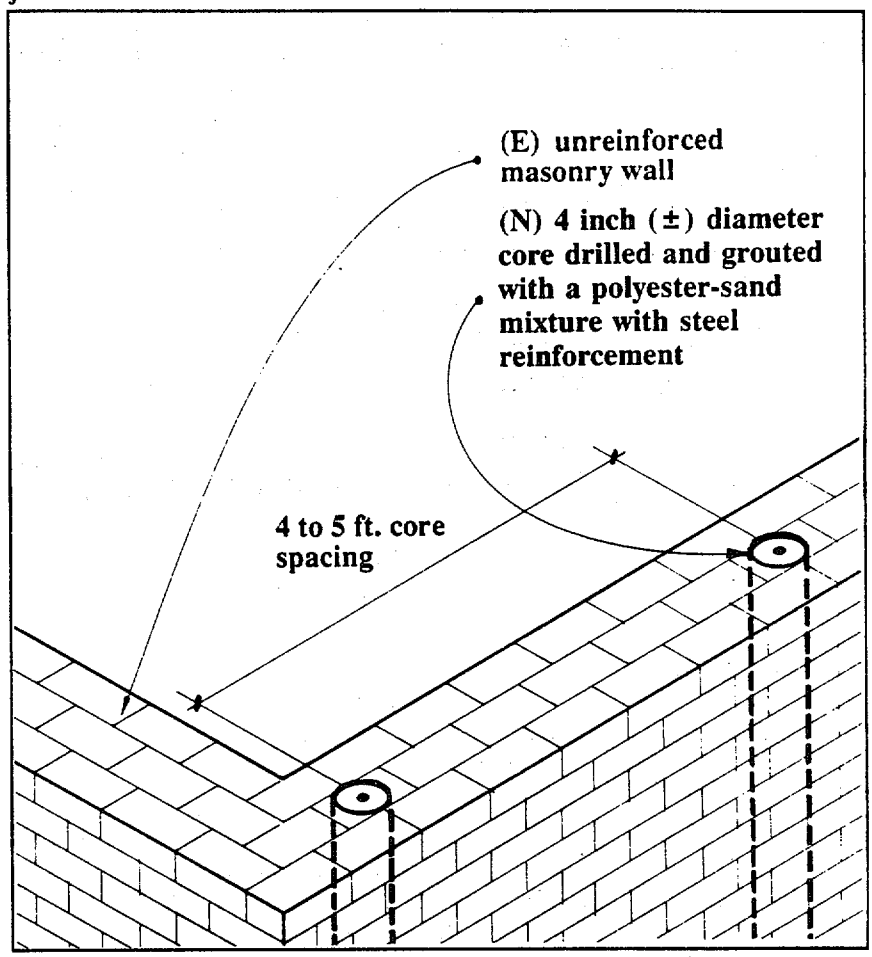

FIGURE 3.2.3.2 Example of center coring technique.

Unreinforced masonry buildings often lack adequate wall anchorage and diaphragm chords. To correct these deficiencies as well as inadequate in-plane shear capacity, it may be desirable to place the concrete overlay on the inside face of the exterior walls (Figure 3.2.1.2c). Foundations, however, may be inadequate to carry the additional weight of the concrete overlay; see the *NEHRP Evaluation Handbook* for further discussion of this subject.

Because unreinforced masonry has minimal tensile strength, these walls are very susceptible to flexural failure caused by out-of-plane forces. A common strengthening technique for this deficiency is to construct reinforced concrete pilasters or steel columns anchored to the masonry wall and spanning between the floor diaphragms. The spacing of the pilasters or columns is such that the masonry wall can resist the seismic inertia forces by spanning as a horizontal beam between the pilasters or columns.

A recent innovation that has been used on several California projects is the seismic strengthening of unreinforced masonry walls by the center coring technique (Technique 2). This technique consists of removing 4 inch (±) diameter vertical cores from the center of the wall at regular intervals (about 3 to 5 feet apart) and placing reinforcing steel and grout in the cored holes. Polymer cement grout has been used because of its workability, low shrinkage, and penetrating characteristics. The reinforcement has been used with and without post-tensioning. This technique provides a reinforced vertical beam to resist flexural stresses, and the infusion

of the polymer grout strengthens the mortar joint in the existing masonry, particularly in the vertical collar joints that generally have been found to be inadequate. This method is a developing technology and designers contemplating its use should obtain the most current information on materials and installation techniques.

Technique 3 for strengthening the out-of-plane capacity of existing walls is to apply thin surface treatments of plaster or portland cement over welded wire mesh. These treatments should be applied on both faces of existing walls.

Filling in existing window and/or door openings (Technique 4) can be a cost-effective means of increasing in-plane shear capacity if the architectural and functional aspects of the building can be accommodated. To maintain strain compatibility around the perimeter of the opening, it is desirable that the infill material have physical properties similar to those of the masonry wall.

3.2.3.3 Alternative Methodology for Evaluation and Design of Unreinforced Masonry Bearing Wall Buildings

An alternative methodology has been developed for the evaluation and design of unreinforced masonry bearing wall buildings with flexible wood diaphragms. Initially designated as the "ABK Methodology," it is based on research funded by the National Science Foundation and performed by Agbabian Associates, S. B. Barnes and Associates, and Kariotis and Associates. The ABK methodology was the basis for the City of Los Angeles' Rule of General Application (RGA) that was developed in cooperation with the Hazardous Buildings Committee of the Structural Engineers Association of Southern California and approved in 1987 as an alternate to the conventional design method in Division 88 of the *Los Angeles City Building Code*. Code provisions for the "ABK Methodology" now have been developed jointly by the Structural Engineers Association of California (SEAOC) and the California Building Officials (CALBO) and are published in the 1991 Edition of the Uniform Code for Building Conservation (available from the International Conference of Building Officials). The procedure for evaluation of unreinforced masonry (URM) bearing wall buildings presented in Appendix C of the *NEHRP Evaluation Handbook* is based on this methodology.

Some of the principal differences between the new methodology and conventional code provisions are as follows:

1. The in-plane masonry walls are assumed to be rigid (i.e., there is no dynamic amplification of the ground motion in walls above ground level).

2. The diaphragms and the tributary masses of the out-of-plane walls respond to ground motion through their attachments to the in-plane walls.

3. The maximum seismic force transmitted to the in-plane walls by the diaphragm is limited by the shear strength of the diaphragms.

4. The diaphragm response is controlled within prescribed limits by cross walls (i.e., existing or new wood sheathed stud walls) or shear walls.

5. Maximum height to thickness (h/t) ratios are specified in lieu of flexural calculations for the out-of-plane response of the walls.

The ABK Methodology and the more conventional evaluation and design methods, prescribed in building codes such as the City of Los Angeles' Division 88 for unreinforced masonry have been prescribed in California with the objective of preservation of life safety rather than prevention of damage. Several moderate earthquakes in Southern California have provided limited testing of the methodology and, although the results are not conclusive, very few of the retrofitted buildings suffered total or partial collapse and the degree of structural damage was less than occurred in nonretrofitted buildings.

3.2.4 SHEAR WALLS IN WOOD FRAME BUILDINGS

3.2.4.1 Deficiencies

The principal deficiencies of wood or metal stud shear wall buildings are:

- Inadequate shear capacity of the wall and
- Inadequate uplift or hold-down capacity of the wall.

3.2.4.2 Strengthening Techniques for Inadequate Shear Capacity

Techniques. Deficient shear capacity of the wood or metal stud walls can be improved by:

1. Increasing the shear capacity by providing additional nailing to the existing finish material.
2. Increasing the shear capacity by adding plywood sheathing to one or both sides of the wall.
3. Reducing the loads on the wall by providing supplemental shear walls to the interior or perimeter of the building.

Relative Merits. Seismic forces in existing wood frame buildings generally are moderate and, in many cases, the existing walls may be adequate. Tabulated allowable shear values are available for existing finishes such as lath and plaster and gypsum wallboard. In the latter case, existing nailing may dictate the allowable shear value and higher allowable values may be obtained by additional nailing. Similarly, the allowable shear value for walls with existing plywood sheathing may be increased within limits by additional nailing. New plywood sheathing may be nailed onto existing gypsum wallboard. Longer nails are required and the allowable shear values are comparable to plywood nailed directly to the studs, but the existing finish need not be removed.

Existing metal stud shear walls may be evaluated like wood stud walls. The fasteners generally are self-threading sheet metal screws and corresponding allowable shear values are available for the finishes discussed in the preceding paragraph.

Where the shear capacity of an existing wall is increased, the shear transfer capacity at the foundation and the capacity of the foundation connection to resist overturning forces must be checked. Techniques for increasing the foundation shear connection and overturning capacities are discussed in Sec. 3.8.1.

As with other shear wall strengthening techniques, the most economical scheme will be the one that minimizes the total cost, including removal and replacement of finishes and other nonstructural items, disruption of the functional use of the building, and any necessary strengthening of foundations or other structural supports. Under normal circumstances, sheathing the exterior face of the perimeter walls should have the lowest cost, but in some circumstances (e.g., if extensive interior alterations are planned) strengthening existing interior shear walls or adding new interior shear walls will be more economical.

If the loads are so large that the above alternatives are not practical, it may be possible to reduce the forces on the wall by strengthening other existing shear walls or by adding supplemental walls (Technique 3).

3.2.4.3 Strengthening Techniques for Inadequate Uplift or Hold-Down Capacity

Techniques. Strengthening techniques for inadequate uplift or hold-down capacity are discussed in Sec. 3.7.1.5 and are illustrated in Figures 3.7.1.5 (a, b, c, and d).

3.3 VERTICAL-RESISTING ELEMENTS--BRACED FRAMES

Braced frames are vertical elements that resist lateral loads through tension and/or compression braces. There are two principal types of braced frames: concentric bracing consisting of diagonals, chevrons, K-bracing, or tension rods and eccentric bracing (Figure 3.3).

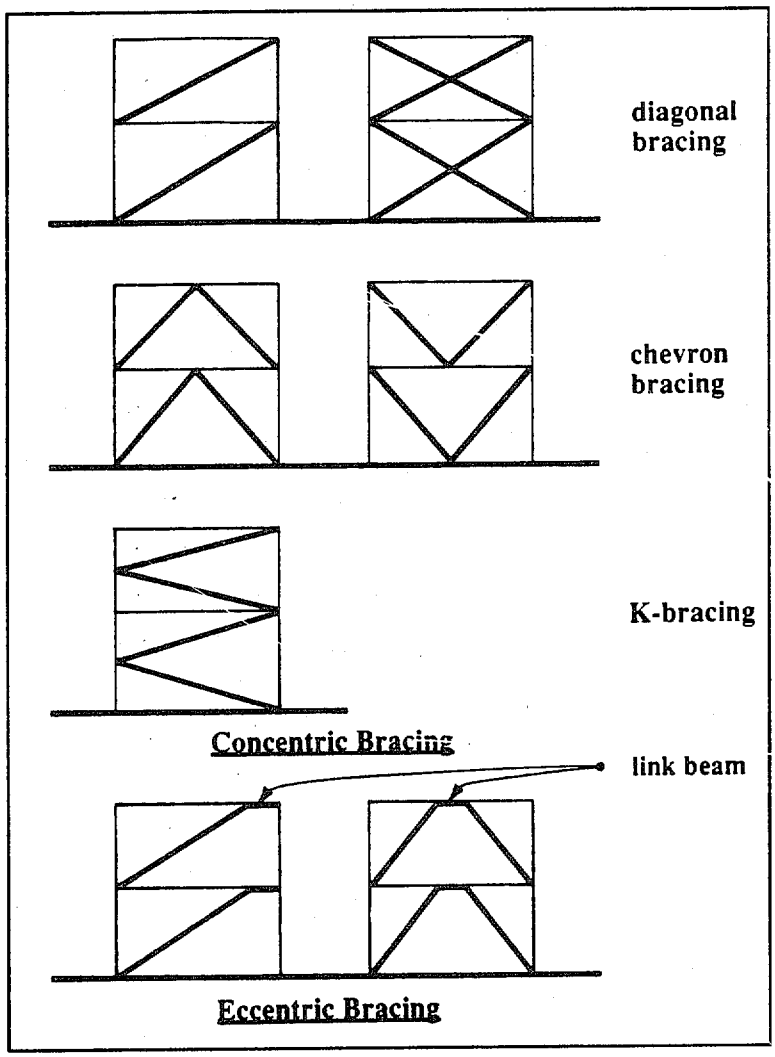

FIGURE 3.3 Bracing types.

K-bracing has undesirable performance characteristics for seismic loads in that buckling of the compression brace results in an unbalanced horizontal force on the column from the remaining tension brace. Some building codes permit K-bracing only in low seismic zones where there is only a small probability of exceedance for the design seismic forces. In the higher seismic zones, these braces should be removed and the system modified to one of the other bracing configurations; further, this should be done in all other seismic zones if at all possible. Chevron bracing has similar characteristics in that buckling of one brace in compression results in an unbalanced tensile force from the remaining brace. With chevron bracing, the unbalanced force occurs on the beam rather than the column. Nonetheless, the unbalanced tensile brace reaction should be considered in the rehabilitation, particularly in the case of the inverted V configuration in which the unbalanced force is additive to the gravity loads supported by the beam. Braced frames are typically of steel construction, however, concrete braced frames are occasionally constructed.

3.3.1 STEEL CONCENTRICALLY BRACED FRAMES

3.3.1.1 Deficiencies

The principal deficiencies of steel concentrically braced frames are:*

- Inadequate lateral force capacity of the bracing system governed by buckling of the compression brace,
- Inadequate capacity of the brace connection,

*The American Institute of Steel Construction has written a minority opinion regarding this sentence; see page 193.

- Inadequate axial load capacity in the columns or beams of the bracing system, and
- Brace configuration that results in unbalanced tensile forces, causing bending in the beam or column when the compression brace buckles.

3.3.1.2 Strengthening Techniques for Inadequate Brace Capacity

Techniques. Deficient brace compression capacity can be improved by:

1. Increasing the capacity of the braces by adding new members thus increasing the area and reducing the radius of gyration of the braces.
2. Increasing the capacity of the member by reducing the unbraced length of the existing member by providing secondary bracing.
3. Providing greater capacity by removing and replacing the existing members with new members of greater capacity (Figure 3.3.1.2).
4. Reducing the loads on the braces by providing supplemental vertical-resisting elements (i.e., shear walls, bracing, or eccentric bracing) as discussed in Sec. 3.4.

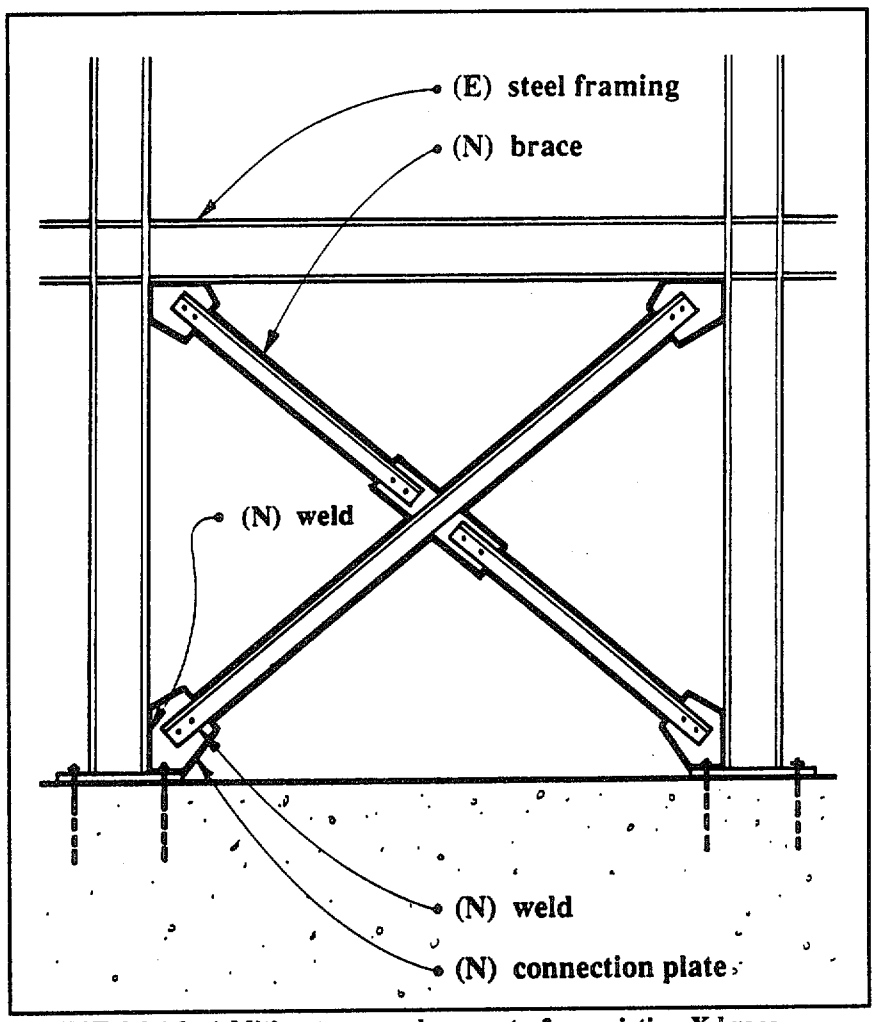

FIGURE 3.3.1.2 Addition to or replacement of an existing X-brace.

Relative Merits. A brace member is designed to resist both tension and compression forces, but its capacity for compression stresses is limited by potential buckling and is therefore less than the capacity for tensile stresses. Since the design of the system generally is based on the compression capacity of the brace, some additional capacity may be obtained by simply reducing the unsupported length of the brace by means of secondary bracing (Technique 3) provided the connections have adequate reserve capacity or can be strengthened for the additional loads.

If significant additional bracing capacity is required, it will be necessary to consider strengthening (Technique 1) or replacement (Technique 3) of the brace. Single-angle bracing can be doubled; double-angle bracing can be "starred"; channels can be doubled; and other rolled sections can be cover plated. New sections should be designed to be compact if possible since they will perform with significantly more ductility than noncompact sections. These modifications probably will require strengthening or redesign of the connections. The other members of the bracing system (i.e., columns and beams) must be checked for adequacy with the new bracing loads. Strengthening of existing K- or chevron bracing should be undertaken only after careful evaluation of the additional bending forces following the buckling of the compression bracing. Where the existing bracing in these systems is found to have inadequate capacity, the preferred solution is to replace it with a diagonal or cross-bracing configuration.

It usually is a good idea to limit the strengthening of the existing bracing to the capacity of the other members of the bracing system and the foundations and to provide additional bracing if required. An alternative would be to provide new shear walls or eccentric bracing. Construction of supplemental shear walls may be disruptive and probably will require new foundations. The greater rigidity of the shear walls as compared with that of the bracing also may tend to make the existing bracing relatively ineffective. The rigidity of eccentric bracing, however, can be "tuned" to be compatible with that of the existing concentric bracing, but the advantages of the eccentric bracing may be offset by its greater construction cost. Thus, strengthening the existing bracing or providing additional concentric bracing are considered to be the most cost-effective alternatives.

3.3.1.3 Strengthening Techniques for Inadequate Capacity of the Brace Connection

Techniques. Deficient brace connection capacity can be improved by:

1. Increasing the capacity of the connections by additional bolting or welding.

2. Increasing the capacity of the connections by removing and replacing the connection with members of greater capacity.

3. Reducing the loads on the braces and their connections by providing supplemental vertical-resisting elements (i.e., shear walls, bracing, or eccentric bracing) as discussed in Sec. 3.4.

Relative Merits. Adequate capacity of brace connections is essential to the proper performance of the brace. The capacity of the brace is limited by its compression capacity and the connection may have been designed for this load. When the brace is loaded in tension, however, the brace may transmit significantly higher forces to the connection. If the existing connection members (e.g., gusset plates) have sufficient capacity, the most economical alternative may be to increase the existing connection capacity by providing additional welding or bolts. If the existing gusset plates have inadequate capacity, the existing configuration and accessibility need to be assessed to determine whether adding supplemental connecting members or replacing the existing connecting members with members of greater capacity (Technique 3) is more economical. If the existing brace members require strengthening or replacement with members of greater capacity, it is probable that new connections would be the most cost-effective alternative.

Whether Technique 1 (reducing loads by adding supplemental members) is a cost-effective alternative is most likely to be a consideration when assessing the capacities of the braces, not the brace connections. The merits of this alternative are discussed above.

3.3.1.4 Strengthening Techniques for Inadequate Axial Load Capacity in the Columns or Beams of the Bracing System

Techniques. Deficient axial load capacity of existing bracing system columns and beams can be improved by:

1. Providing additional axial load capacity by adding cover plates to the member flanges or by boxing the flanges.

2. Providing additional axial load capacity by jacketing the existing members with reinforced concrete.

3. Reducing the loads on the beams and columns by providing supplemental vertical-resisting elements (i.e., shear walls, bracing, or eccentric bracing) as discussed in Sec. 3.4.

Relative Merits. The most cost-effective alternative for increasing the capacity of the existing beams and columns in a concentrically braced frame system is to add cover plates to or box the flanges (Technique 1). The effort involved in adding cover and box plates includes removing the existing fireproofing and nonstructural obstructions. Jacketing of existing members with reinforced concrete (Technique 2) would seldom be cost-effective due to the significant forming effort required. The relative merits of reducing the loads by providing supplemental members is discussed in Sec. 3.3.1.2.

3.3.2 ROD OR OTHER TENSION BRACING

3.3.2.1 Deficiencies

The principal deficiencies of rod or other tension bracing systems are:

- Inadequate tension capacity of the rod, tensile member, or its connection and

- Inadequate axial capacity of the beams or columns in the bracing system.

3.3.2.2 Strengthening Techniques for Tension Capacity

Techniques. Deficient tension capacity of the rod or other tension member and its connection can be improved by:

1. Increasing the capacity by strengthening the existing tension members.

2. Increasing the capacity by removing the existing tension members and replacing with new members of greater capacity.

3. Increasing the capacity by removing the existing tension member and replacing it with diagonal or X-bracing capable of resisting compression as well as tension forces.

4. Reducing the forces on the existing tension members by providing supplemental vertical-resisting elements (i.e., additional tension rods) as discussed in Sec. 3.4.

Relative Merits. Tension bracing is commonly found in light industrial steel frame buildings including some designed for prefabrication. The most common deficiency is inadequate tensile capacity in the tension rods. These rods generally are furnished with upset ends so that the effective area is in the body of the rod rather than at the root of the threads in the connection. It therefore is rarely feasible to strengthen a deficient rod (Technique 1); hence, correction of the deficiency likely will require removal and replacement with larger rods (Technique 2), removal of existing tension bracing and replacement with new bracing capable of resisting tension

and compression (Technique 3), or installation of additional bracing (Technique 4). When replacing existing tension braces with new braces capable of resisting tension and compression it is good practice to balance the members (i.e., design the system such that approximately the same number of members act in tension as in compression). Increasing the size of the bracing probably will require strengthening of the existing connection details and also will be limited by the capacity of the other members of the bracing system or the foundations as discussed above for ordinary concentric bracing. The effectiveness of replacing the tension bracing with members capable of resisting compression forces depends on the length of the members and the need for secondary members to reduce the unbraced lengths. Secondary members may interfere with existing window or door openings. The most cost-effective technique for correction of the deficiency probably will be to provide additional bracing (Technique 4) unless functional or other nonstructural considerations (e.g., obstruction of existing window or door openings) preclude the addition of new bracing.

3.3.2.3 Strengthening Techniques for Beam or Column Capacity

Techniques. Deficient axial capacity of the beams or columns of the bracing systems can be improved by:

1. Increasing the axial capacity by adding cover plates to or by boxing the existing flanges.

2. Reducing the forces on the existing columns or beams by providing supplemental vertical-resisting elements (i.e., braced frames or shear walls) as discussed in Sec. 3.4.

Relative Merits. Reinforcing the existing beams or columns with cover plates or boxing the flanges generally is the most cost-effective alternative. If supplemental braces or shear walls are required to reduce stresses in other structural components such as the tension rods or the diaphragm, the addition of supplemental vertical-resisting elements may be a viable alternative.

3.3.3 ECCENTRIC BRACING

3.3.3.1 Deficiency

The primary deficiency of an eccentrically braced frame system is likely to be nonconformance with current design standards because design standards for such elements did not exist earlier than about 1980. Eccentric bracing in older buildings may not have the desired degree of ductility.

3.3.3.2 Strengthening Techniques for Eccentric Braced Frames

Techniques. An existing eccentrically braced frame system can be brought into conformance with current design standards by ensuring that the system is balanced (i.e., there is a link beam at one end of each brace), the brace and the connections are designed to develop shear or flexural yielding in the link, the connection is a full moment connection where the link beam has an end at a column, and lateral bracing is provided to prevent out-of-plane beam displacements that would compromise the intended action. Alternatively, the loads on the existing eccentrically braced frame can be reduced by providing supplemental vertical-resisting elements such as additional eccentrically braced frames.

Relative Merits. The use of engineered eccentric bracing is a relatively recent innovation (within about 10 years) that can provide the rigidity associated with concentric bracing as well as the ductility associated with moment frames. The recommended design of these frames precludes compressive buckling of the brace members by shear yielding of a short portion of the horizontal beam (the link beam). If the brace is in a diagonal configuration, the yielding occurs in the horizontal beam between the brace connection and the adjacent column; if it is in a chevron configuration, the yielding occurs in the beam between the two brace connections.

Because this system is relatively new, a deficiency in the lateral load capacity reflects either improper design or upgraded design criteria. A properly designed eccentric bracing system balances the yield capacity of the horizontal link beam against the buckling capacity of the brace beam. It usually is not cost-effective to strengthen the members of this bracing system unless it is necessary to correct a design defect (e.g, if the brace has been over designed, the shear capacity of the horizontal beam can be increased by adding doubler plates to the beam web provided other members of the system have adequate additional capacity). Usually it will be necessary to add additional bracing. It should be noted, however, that although eccentric bracing is a desirable supplement to an existing concentric bracing system, concentric bracing is not desirable as a supplement to an existing eccentric bracing system. The proper functioning of an eccentric bracing system requires inelastic deformations that are not compatible with concentric bracing; the introduction of a ductile element (eccentric bracing) into an existing "brittle" system (concentric bracing) is beneficial, but the reverse procedure is not the case. The addition of shear walls to an existing eccentric bracing system also is usually not effective because of their greater rigidity. Thus, the most cost-effective procedure for increasing the capacity of an existing eccentric bracing system probably will be to provide additional eccentric bracing.

3.4 VERTICAL-RESISTING ELEMENTS--ADDING SUPPLEMENTAL MEMBERS

The lateral seismic inertial forces of an existing building are transferred from the floors and roofs through the vertical-resisting elements (i.e., shear walls, braced frames and moment frames) to the foundations and into the ground. The forces in the individual shear walls, braced frames, and moment frames are a function of the weight and height of the building plus the number, size, and location of the elements. By adding new vertical elements to resist lateral forces, the forces in the existing elements will be modified and generally will be reduced. Thus, the addition of supplemental vertical elements that will resist lateral loads can be a means to correct existing elements that are overstressed. The purpose of this section is to discuss the benefits and the problems associated with adding supplemental vertical-resisting elements to an existing building so that comparisons with other rehabilitation techniques such as strengthening overstressed members or reducing demand can be placed in perspective. The two general categories of supplemental vertical-resisting elements are in-plane supplemental elements and new bay supplemental elements. The two categories are schematically portrayed in Figure 3.4.

The introduction of new in-plane supplemental elements into a building will primarily reduce the forces on the existing vertical elements in the plane where the new element is added. Forces on other vertical-resisting elements, diaphragms, and the connections between them will be modified to a lesser degree depending on the relative rigidities of the vertical elements and the diaphragms. All wood and some steel deck diaphragms may be considered "flexible" when used with masonry or concrete shear walls. Straight laid sheathing may be "flexible" with any type of construction, but plywood sheathed diaphragms may be considered rigid with wood frame walls or light steel frame construction. Where diaphragms are flexible, the addition of a supplemental vertical element in the plane of existing vertical elements will have essentially no effect on the forces in vertical elements located in other bays or on the diaphragms or the connections between the diaphragms and the vertical-resisting elements.

On the other hand, the introduction of new vertical bay supplemental elements, will reduce the forces on all the elements--existing vertical elements, diaphragms, foundations, and the connections between them. The reduction in forces will be proportional to the relative rigidity of the vertical elements when the building has a rigid diaphragm and will be proportional to the tributary areas associated with the vertical-resisting elements when the building has a flexible diaphragm.

The effect of adding in-plane supplemental elements or new bay supplemental elements on the lateral-force distribution of an existing building needs to be evaluated when considering whether to add new vertical elements or to strengthen existing members to reduce demand on bracing elements.

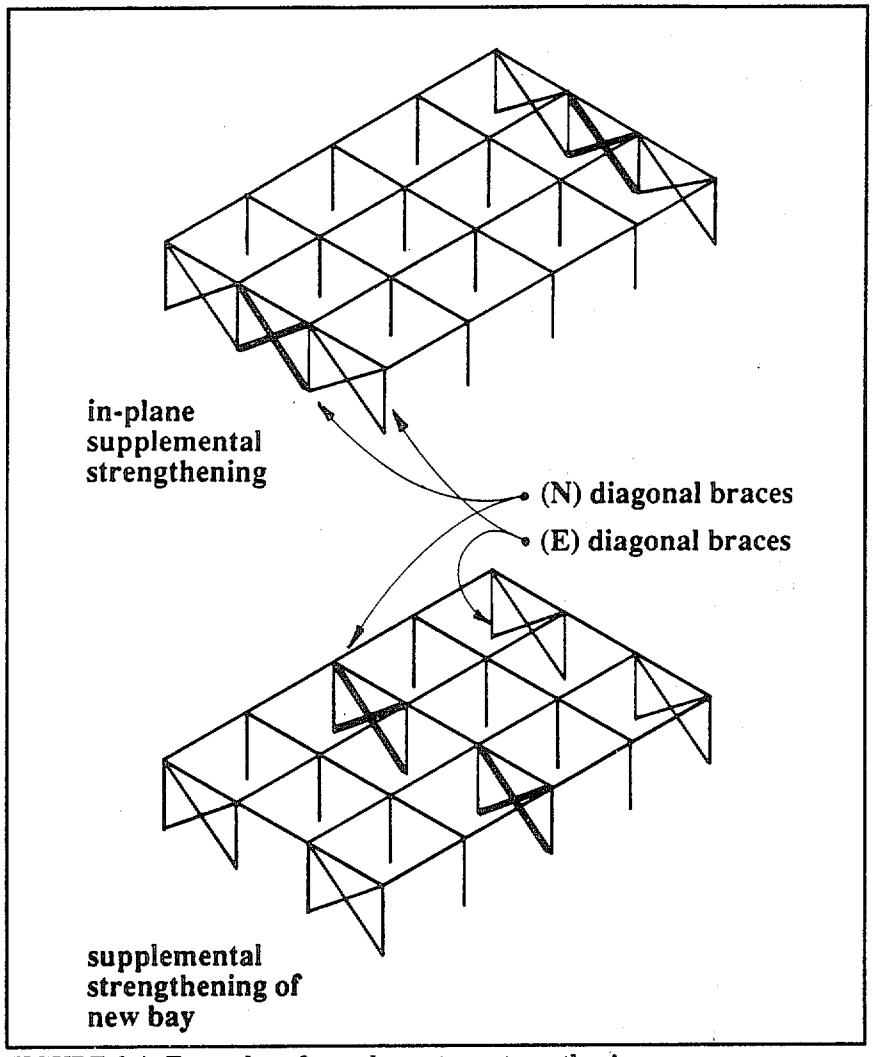

FIGURE 3.4 Examples of supplementary strengthening.

3.4.1 RELATIVE COMPATIBILITY

The effectiveness of supplemental vertical-resisting elements in reducing forces on overstressed components is dependent on the stiffness, strength, and ductility compatibility of the existing vertical-resisting elements relative to the new vertical elements.

Stiffness compatibility is particularly important. A moment frame, for example, is relatively flexible in the lateral direction. New supplemental moment frames, shear walls, or braced frames can be added to an existing moment frame structure. The loads that will be transferred to the supplemental elements will be in proportion to their relative stiffness (for a rigid diaphragm) and, therefore, a shear wall or braced frame added to a moment frame structure will resist a significant portion of the lateral load. If the existing vertical-resisting elements are concrete shear walls, supplemental moment frames generally would be ineffective because of the large degree of wall stiffness.

Structures responding to large earthquakes will behave inelastically, hence the sequence in which different elements yield and the ability of the elements to continue to function in the post yield condition (i.e., their ductility) will affect the dynamic response of the structure. Weaker elements that yield become more flexible resulting in a redistribution of forces. Ductile elements will continue to participate in absorbing energy and resisting forces after yielding. Structures with elements having compatible strengths and ductility will behave better and more predictably than structures with elements of different strength and ductility.

3.4.2 EXTERIOR SUPPLEMENTAL ELEMENTS

The construction of exterior supplemental moment frames, shear walls, or braced frames has many advantages. Exterior elements can be as effective in reducing loads on other elements as interior elements; yet, construction may be significantly less costly and access for equipment and materials will be significantly easier than for interior construction. Perhaps the single biggest advantage of exterior supplemental elements is that disruption of the functional use of the interior of the building will be minimized both during and after construction. Figure 3.4.2 shows the addition of an exterior supplemental concrete shear wall to an existing concrete or masonry building. Steel structures also can be used as buttresses.

There are, however, inherent problems in constructing supplemental exterior shear walls, braced frames, and moment frames. Many buildings do not have the necessary space to accommodate exterior structures due to the location of adjacent buildings or property lines. New exterior elements also may significantly affect the architectural aesthetics of the exterior of the building.

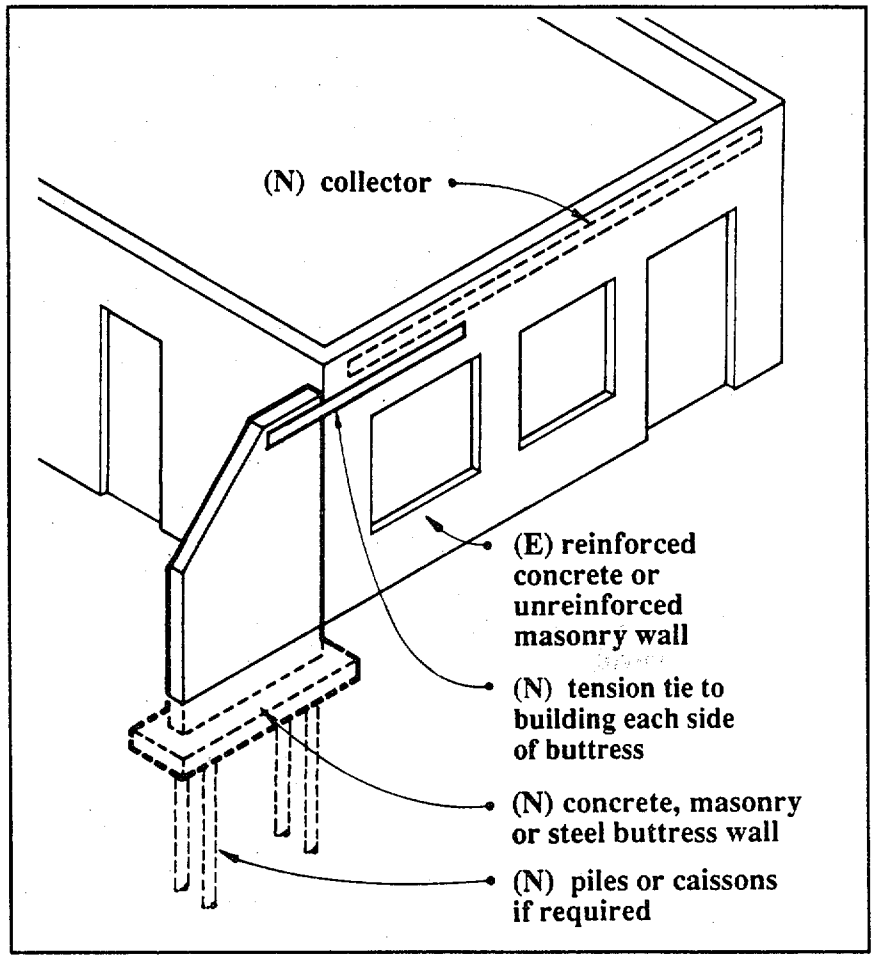

FIGURE 3.4.2 Example of supplemental in-plane strengthening by the addition of an external buttress.

Supplemental elements generally will require a significant capacity to resist overturning forces. Elements away from the building (e.g., the end of a buttress wall) will not be able to mobilize the dead weight of the building to resist the overturning forces, and significant uplift capacity therefore may be required in the new foundation.

The construction of exterior elements also does not preclude the need for interior construction. A load path must be provided to transfer forces from the existing building elements to the new external vertical-resisting elements. This usually necessitates the construction of collectors on the interior of the building.

3.4.3 INTERIOR SUPPLEMENTAL ELEMENTS

The construction of interior supplemental moment frames, shear walls, or braced frames will involve significant disruption of the functional operation of the building. Existing architectural coverings will need to be removed and new foundations constructed along with the new frame or wall and necessary collectors. It usually is desirable to locate new walls or frames along existing framing lines (i.e., framing into existing columns and beams) in order to provide boundary members, collectors, and dead load to help resist overturning forces while taking advantage of existing column foundations. Figure 3.4.3 shows the addition of a supplemental reinforced concrete shear wall on the interior of an existing concrete building. It should be noted that all concrete pours are subject to consolidation and shrinkage and, in this detail, the concrete may sag away from the underside of

the concrete slab. This condition may be improved with proper mix design for low shrinkage or, alternatively, the lower wall can be made in two pours 48 hours apart. The initial pour would be up to about 18 inches from the slab soffit to allow sufficient space to form shear keys and to clean and prepare the surface for the following pour to the top of the slab.

Functional considerations likely will dictate the location of interior supplemental elements. This is particularly the case with shear walls or braced frames that will significantly break up the interior space.

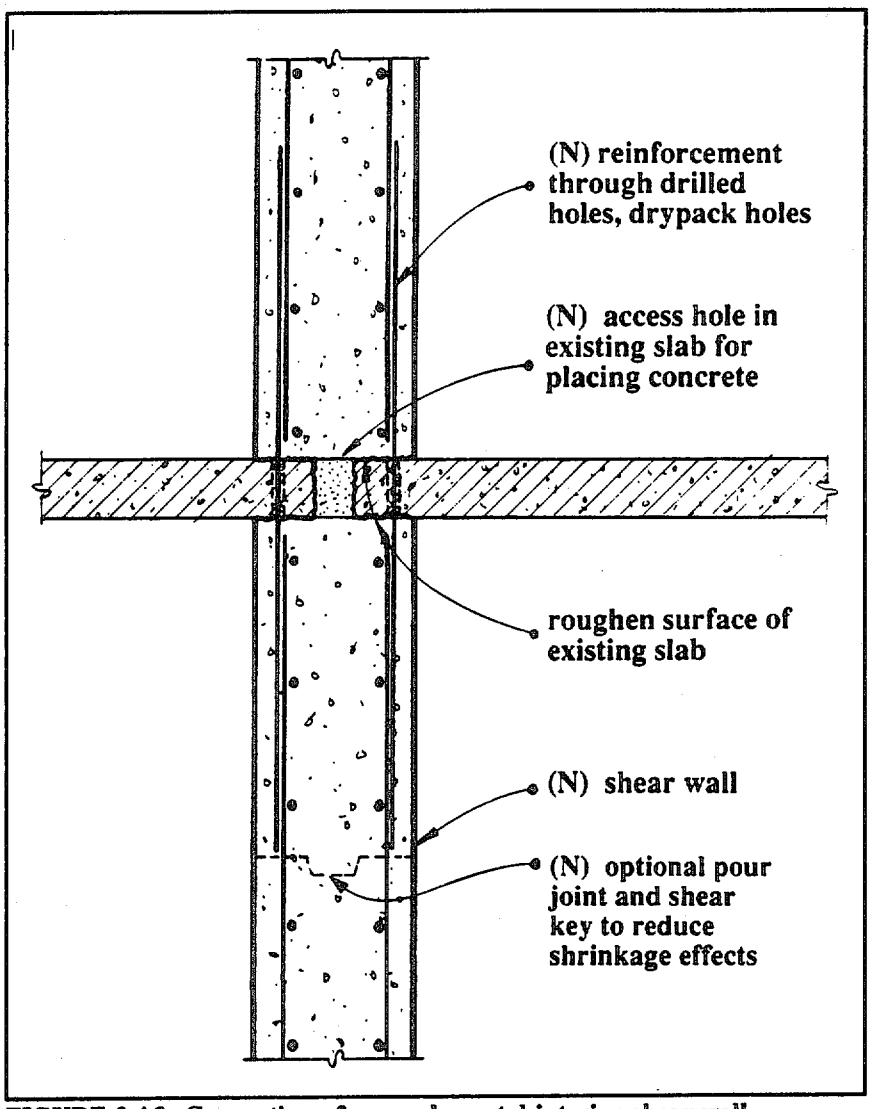

FIGURE 3.4.3 Connection of a supplemental interior shear wall.

3.5 DIAPHRAGMS

Diaphragms are horizontal subsystems that transmit lateral forces to the vertical-resisting elements. Diaphragms typically consist of the floors and roofs of a building. In this handbook, the term "diaphragm" also includes horizontal bracing systems. There are five principal types of diaphragms: timber diaphragms, concrete diaphragms, precast concrete diaphragms, steel decking diaphragms, and horizontal steel bracing.

Inadequate chord capacity is listed as a deficiency for most types of diaphragms. Theoretical studies, testing of diaphragms, and observation of earthquake-caused building damage and failures provide evidence that the commonly used method of determining diaphragm chord force (i.e., comparing the diaphragm to a flanged beam

and dividing the diaphragm moment by its depth) may lead to exaggerated chord forces and, thus, overemphasize the need for providing an "adequate" boundary chord. Before embarking on the repair of existing chord members or the addition of new ones, the need for such action should be considered carefully with particular attention to whether the beam analogy is valid for calculating chord forces in the diaphragm under consideration.

Since few diaphragms have span-depth ratios such that bending theory is applicable, the capacity of the diaphragm to resist the tensile component of shear stress could be compared with tensile stresses derived from deep beam theory. In analyzing diaphragms by beam theory, chords provided by members outside of the diaphragms but connected to their edges may be considered and may satisfy the chord requirement.

3.5.1 TIMBER DIAPHRAGMS

3.5.1.1 Deficiencies

Timber diaphragms can be composed of straight laid or diagonal sheathing or plywood. The principal deficiencies in the seismic capacities of timber diaphragms are:

- Inadequate shear capacity of the diaphragm,
- Inadequate chord capacity of the diaphragm,
- Excessive shear stresses at diaphragm openings or at plan irregularities, and
- Inadequate stiffness of the diaphragm resulting in excessive diaphragm deformations.

3.5.1.2 Strengthening Techniques for Inadequate Shear Capacity

Techniques. Deficient shear capacity of existing timber diaphragms can be improved by:

1. Increasing the capacity of the existing timber diaphragm by providing additional nails or staples with due regard for wood splitting problems.
2. Increasing the capacity of the existing timber diaphragm by means of a new plywood overlay.
3. Reducing the diaphragm span through the addition of supplemental vertical-resisting elements (i.e., shear wall or braced frames) as discussed in Sec. 3.4.

Relative Merits. Adding nails and applying a plywood overlay (Techniques 1 and 2) require removal and replacement of the existing floor or roof finishes as well as removal of existing partitioning, but they generally are less expensive than adding new walls or vertical bracing (Technique 3). If the existing system consists of straight laid or diagonal sheathing, the most effective alternative is to add a new layer of plywood since additional nailing typically is not feasible because of limited spacing and edge distance. Additional nailing usually is the least expensive alternative, but the additional capacity is still limited to the number and capacity of the additional nails that can be driven (i.e., with minimum allowable end distance, edge distance, and spacing).

The additional capacity that can be developed by plywood overlays usually depends on the capacity of the underlying boards or plywood sheets to develop the capacity of the nails from the new overlay. Higher shear values are allowed for plywood overlay when adequate nailing and blocking (i.e., members with at least 2 inches of nominal thickness) can be provided at all edges where the plywood sheets abut. Adequate additional capacity for most timber diaphragms can be developed using this technique unless unusually large shears need to be resisted. When nailing into existing boards, care must be taken to avoid splitting. If boards are prone to splitting, pre-drilling may be necessary.

The addition of shear walls or vertical bracing in the interior of a building may be an economical alternative to strengthening the diaphragms particularly if the additional elements can be added without the need to

strengthen the existing foundation. The alternative methodology described in Sec. 3.2.3.3 emphasizes control of the existing diaphragm response by cross walls or shear walls rather than by strengthening and, in that methodology, the shear transmitted to the in-plane walls is limited by the strength of the diaphragm. Although the methodology was developed for buildings with unreinforced masonry walls and flexible timber diaphragms, the above diaphragm provisions are considered to be generally applicable for timber diaphragms in buildings with other relatively rigid wall systems. When additional bracing or interior shear walls are required, relative economy depends on the degree to which ongoing operations can be isolated by dust and noise barriers and on the need for additional foundations.

3.5.1.3 Strengthening Techniques for Inadequate Chord Capacity

Techniques. Deficient diaphragm chord capacity can be improved by:

1. Providing adequately nailed or bolted continuity splices along joists or fascia parallel to the chord (Figure 3.5.1.3).

2. Providing a new continuous steel chord member along the top of the diaphragm.

3. Reducing the stresses on the existing chords by reducing the diaphragm's span through the addition of new shear walls or braced frames as discussed in Sec. 3.4.

Relative Merits. Wood diaphragms typically are constructed with minimal capacity to resist chord forces. Bottom wall plates nailed into the plywood are not spliced but butted; hence, the chord capacity provided at the bottom plate joints will be minimal. If the nailing between the bottom plate and the plywood is sufficient to transfer chord forces, splicing the top plate can be a means to provide this chord capacity. Steel straps can be nailed across the butted joint to provide this splice capacity, but notching of the bottom of some of the wood studs may be necessary to install the splice plates.

Another alternative is to utilize the double top plates on the wall below the diaphragm as the chord member. The double top plates typically are lapped and nailed. With sufficient lap nailing, the chord capacity of one plate can be developed if an adequate path for shear transfer is provided between the diaphragm and the top plates. This load path can be provided by nailing such as that shown in Figure 3.5.1.3. New or existing nailing needs to be verified or provided between the diaphragm sheathing, the edge blocking, the exterior sheathing, and the top plates.

Simplified calculations to determine stresses in diaphragm chords conservatively consider the diaphragm as a horizontal beam and ignore the flexural capacity of the web of the diaphragm as well as the effect of the out-of-plane shear walls that reduce the chord stresses. However, even though the chord requirements in some buildings may be overstated, in most buildings a continuous structural element is required at diaphragm boundaries to collect the diaphragm shears and transfer them to the individual resisting shear walls along each boundary (see Sec. 3.7.1).

A continuous steel member along the top of the diaphragm may be provided to function as a chord or collector member. For existing timber diaphragms at masonry or concrete walls, the new steel members may be used to provide wall anchorage as indicated in Figure 3.7.1.4b as wall as a chord or collector member for the diaphragm shear forces.

The lack of adequate chord capacity is seldom the reason why new shear walls or braced frames (Technique 3) would be considered to reduce the diaphragm loads. Reducing the diaphragm span and loads through the introduction of new vertical-resisting elements, however, may be considered to address other member deficiencies and, if so, the chord inadequacy problem also may be resolved.

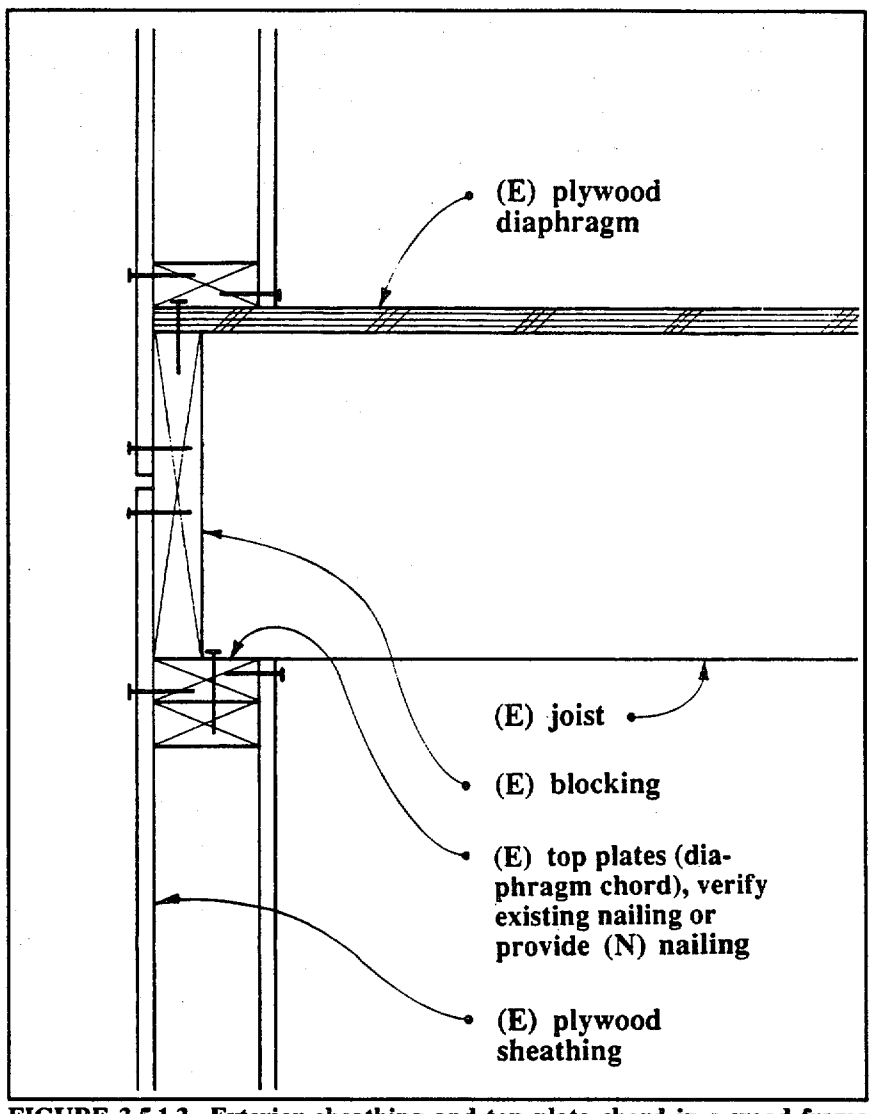

FIGURE 3.5.1.3 Exterior sheathing and top plate chord in a wood frame building.

3.5.1.4 Strengthening Techniques for Excessive Shear Stresses at Openings or Plan Irregularities

Techniques. Excessive shear stresses at diaphragm openings or other plan irregularities can be improved by:

1. Reducing the local stresses by distributing the forces along the diaphragm by means of drag struts (Figures 3.5.1.4a and 3.5.1.4b).

2. Increasing the capacity of the diaphragm by overlaying the existing diaphragm with plywood and nailing the plywood through the sheathing at the perimeter of the sheets adjacent to the opening or irregularity.

3. Reducing the diaphragm stresses by reducing the diaphragm spans through the addition of supplemental shear walls or braced frames as discussed in Sec. 3.4.

Relative Merits. The most cost-effective way to reduce large local stresses at diaphragm openings or plan irregularities is to install drag struts (Figures 3.5.1.4a and 3.5.1.4b), to distribute the forces into the diaphragm

(Technique 1). Proper nailing of the diaphragm into the drag struts is required to ensure adequate distribution of forces. Local removal of roof or floor covering will be required to provide access for nailing.

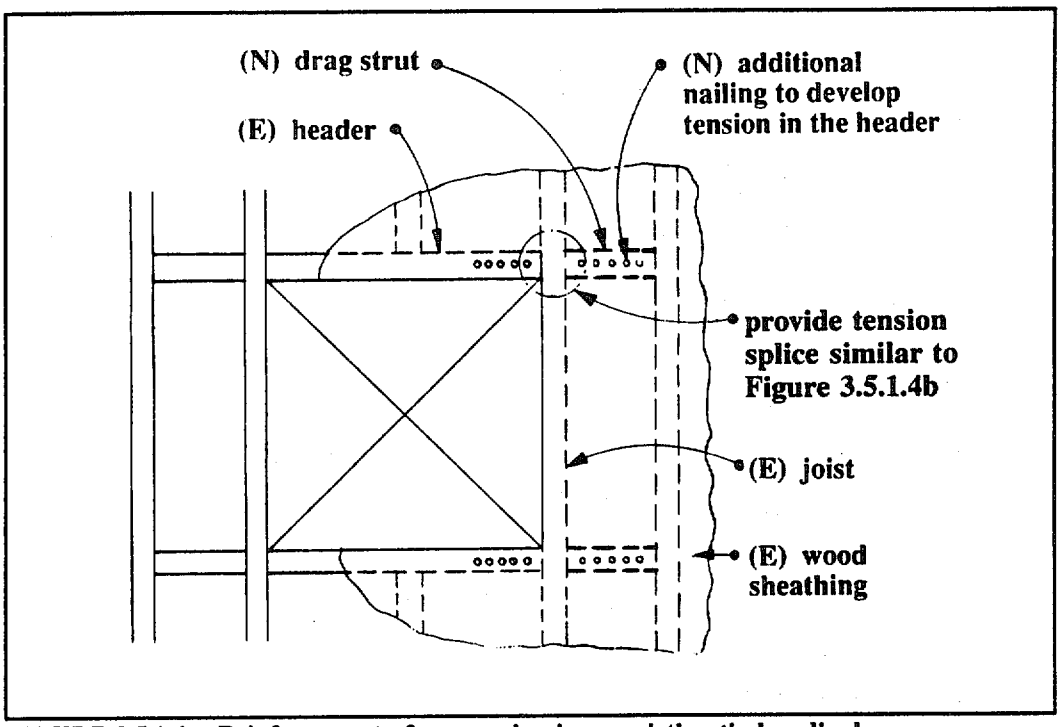

FIGURE 3.5.1.4a Reinforcement of an opening in an existing timber diaphragm.

The analysis for the design of the drag strut and the required additional nailing is similar to that for the reinforcement of an opening in the web of a steel plate girder. The opening divides the diaphragm into two parallel horizontal beams and the shear in each beam causes moment that induces tension or compression in the outer fibers of each beam. For small openings or low diaphragm shears, these bending forces may be adequately resisted as additional stresses in an existing diaphragm. For larger openings and/or larger diaphragms, tension or compression "flanges" may have to be developed at the opening. In a timber diaphragm, these "flanges" may be assumed to be the joists or headers that frame the opening, but to preclude distress due to stress concentration at the corners, the joists or headers must be continuous beyond the edge of the opening in order to transfer the flange forces back into the diaphragm by additional nailing.

Applying a plywood overlay (Technique 2) to increase the local diaphragm capacity or providing supplemental vertical-resisting elements (Technique 3) to reduce the local stresses generally will be viable alternatives only if they are being considered to correct other structural deficiencies.

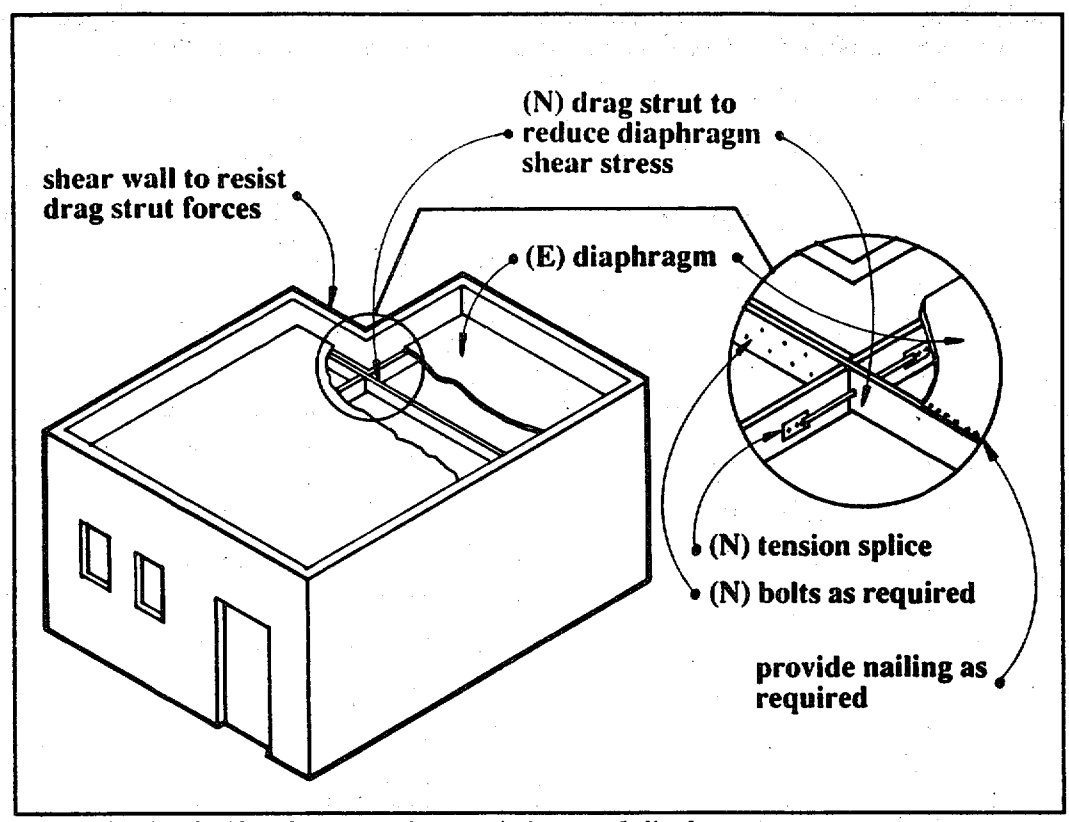

FIGURE 3.5.1.4b New drag strut in an existing wood diaphragm.

3.5.1.5 Strengthening Techniques for Inadequate Stiffness

Techniques. Excessive seismic displacement of an existing timber diaphragm can be prevented by:

1. Increasing the stiffness of the diaphragm by the addition of a new plywood overlay.

2. Reducing the diaphragm span and, hence, reducing the displacements by providing new supplemental vertical-resisting elements such as shear walls or braced frames as discussed in Sec. 3.4.

Relative Merits. The addition of new shear walls or braced frames (Technique 2) may be the most cost-effective alternative for reducing excessive displacements of plywood diaphragms (as is also the case for reducing excessive shear stresses as discussed above) if the additional elements can be added without strengthening the existing foundations and when the existing functional use of the building permits it.

The spacing of new vertical elements required to limit the deflection of straight or diagonal sheathing to prescribed limits may be too close to be feasible. In these cases, overlaying with plywood (Technique 1) may be the most cost-effective alternative. For timber diaphragms in buildings with rigid masonry or concrete walls, the alternative methodology described in Sec. 3.2.3.3 permits the use of sheathed timber cross walls to control the excessive displacements of an existing diaphragm as an alternative to strengthening.

3.5.2 CONCRETE DIAPHRAGMS

3.5.2.1 Deficiencies

The principal deficiencies of monolithic concrete diaphragms (i.e., reinforced concrete or post-tensioned concrete diaphragms) are:

- Inadequate in-plane shear capacity of the concrete diaphragm,
- Inadequate diaphragm chord capacity, and
- Excessive shear stresses at the diaphragm openings or plan irregularities.

3.5.2.2 Strengthening Techniques for Inadequate Shear Capacity

Techniques. Deficient in-plane shear capacity of monolithic concrete diaphragms can be improved by:

1. Increasing the shear capacity by overlaying the existing concrete diaphragm with a new reinforced concrete topping slab (Figure 3.5.2.2).
2. Reducing the shear in the existing concrete diaphragm by providing supplemental vertical-resisting elements (i.e., shear walls or braced frames) as discussed in Sec. 3.4.

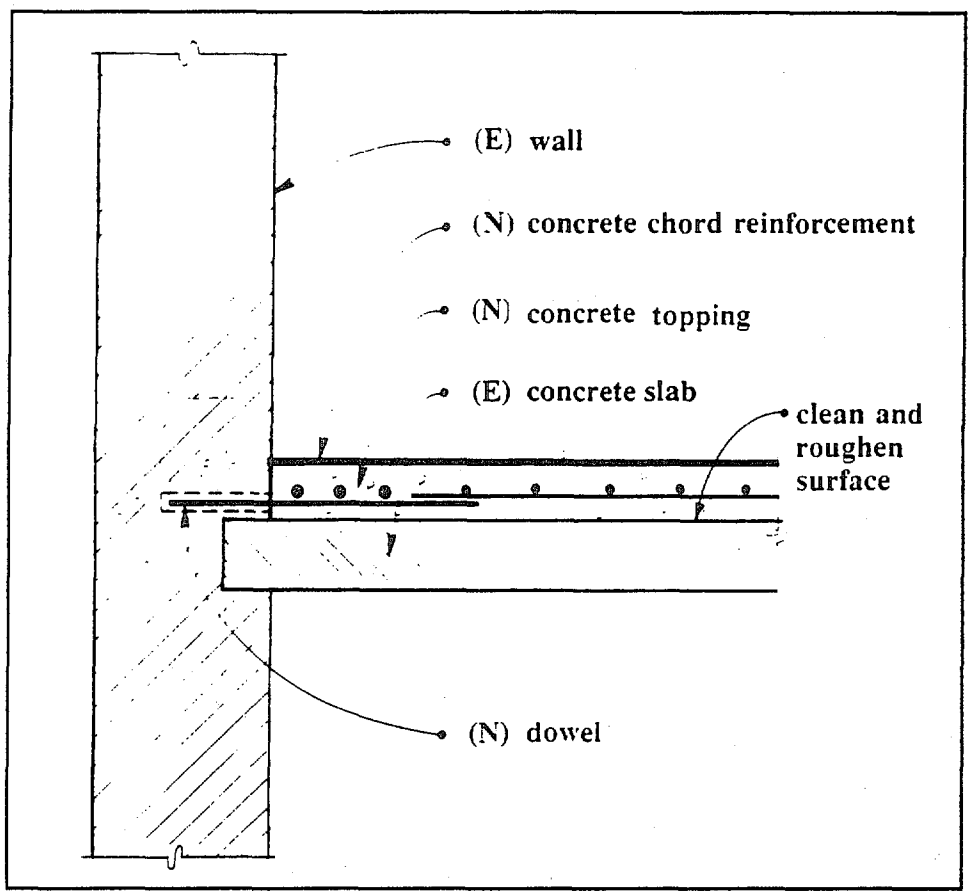

FIGURE 3.5.2.2 Strengthening an existing concrete diaphragm with a new topping slab and chord.

Relative Merits. Concrete diaphragms usually are strengthened with a concrete overlay. This will require removal and replacement of the existing partitions and floor finishes and will be disruptive to ongoing operations even though the work can be limited to one floor or a portion of a floor at a time. Adding the concrete overlay also will increase the dead weight of the structure; therefore, existing members, connections, and foundations must be checked to ensure that they are capable of resisting these added loads.

It may be possible to avoid strengthening a concrete diaphragm by providing additional shear walls or vertical bracing that will reduce the diaphragm shears. This alternative generally is more costly than the overlay, but it may be competitive when it can be restricted to the perimeter of the building and when minimal work is required on the foundations. For shear transfer, new reinforced concrete or masonry shear walls will require dowels grouted in holes drilled in the concrete diaphragms. When the concrete diaphragm is supported on steel framing, shear walls or vertical-bracing may be located under a supporting beam. Dowels or other connections for shear walls or bracing may be welded to the steel beam, but it also may be necessary to provide additional shear studs, welded to the steel

beam, in holes drilled in the diaphragm slab to facilitate the shear transfer from the concrete slab to the steel beam.

3.5.2.3 Strengthening Techniques for Inadequate Flexural Capacity

Techniques. Deficient flexural capacity in monolithic concrete diaphragms can be improved by:

1. Increasing the flexural capacity by removing the edge of the diaphragm slab and casting a new chord member integral with the slab (Figure 3.5.2.3).

2. Adding a new chord member by providing a new reinforced concrete or steel member above or below the slab and connecting the new member to the existing slab with drilled and grouted dowels or bolts as discussed in Sec. 3.5.4.3.

3. Reducing the existing flexural stresses by providing supplemental vertical-resisting elements (i.e., shear walls or braced frames) as discussed in Sec. 3.4.

Relative Merits. If the existing concrete slab is supported on steel framing, the most cost-effective means of providing sufficient diaphragm chord capacity is to ensure adequate shear transfer of the diaphragm to the perimeter steel beam by adding drilled and grouted bolts and to ensure adequate strength and stiffness capacity of the perimeter beam connections. If a new chord is being secured with drilled and grouted anchors to an existing diaphragm containing prestressing strands, drilling must be done very carefully to ensure that the strands are not cut.

Figure 3.5.2.3 shows the provision of a new diaphragm chord and/or collector member as well as new dowels for wall anchorage or shear transfer from the existing concrete diaphragm. Because of the potential risk of gravity load failure at the interface with the existing slab, this detail is recommended only for one-way slabs in the direction parallel to the slab span. For other conditions, a detail using new concrete above or below the slab is recommended. Steel plates or shapes (as shown in Sec. 3.5.4.3) could be used with through bolts tightened to transfer load by friction.

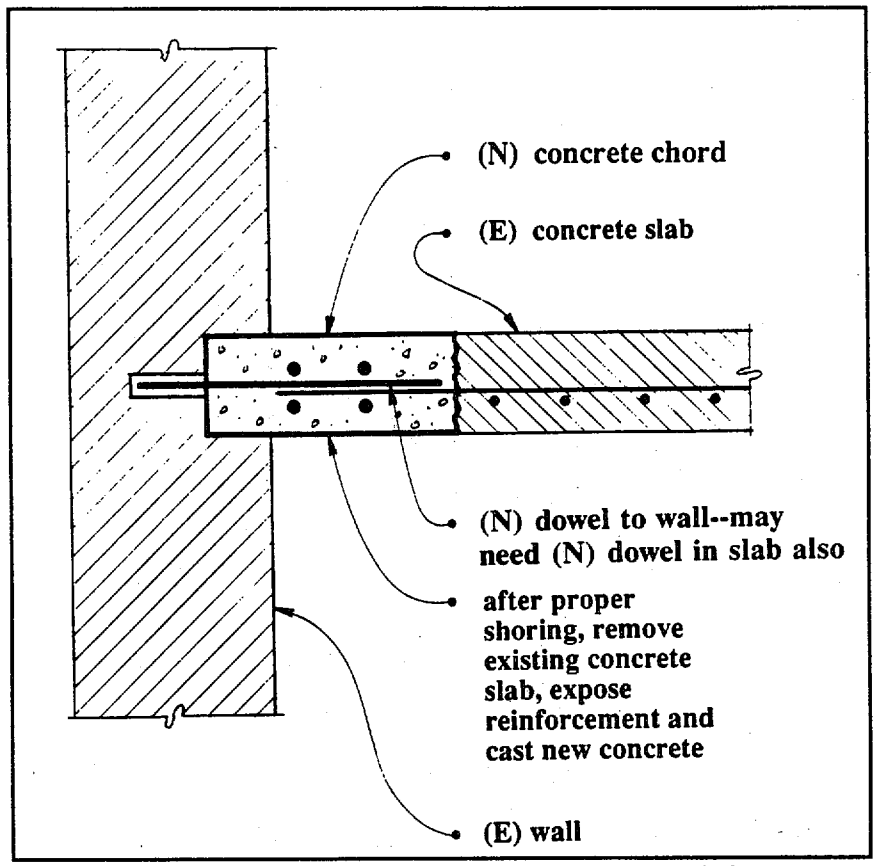

FIGURE 3.5.2.3 Adding a new chord member to an existing concrete diaphragm (not recommended for precast elements).

Providing new structural steel or reinforced concrete elements to reinforce the existing diaphragm at the openings is similar to the analysis described in Sec. 3.5.1.4. The tensile or compressive stresses in the new elements at the opening must be developed by shear forces in the connection to the existing slab. The new ele-

ments also must be extended beyond the opening a sufficient distance to transfer the tensile or compressive chord forces back into the existing slab in the same manner. Removing the stress concentration by filling in the opening (Technique 3) may be a feasible alternative provided that the functional requirements for the opening (e.g., stair or elevator shaft or utility trunk) no longer exist or it has been relocated.

3.5.2.4 Strengthening Techniques for Excessive Shear Stresses at Openings

Techniques. Deficient shear stress at diaphragm openings or plan irregularities in monolithic concrete slabs can be improved by:

1. Reducing the local stresses by distributing the forces along the diaphragm by means of structural steel (Figure 3.5.2.4a), or reinforced concrete elements cast beneath the slab and made integral through the use of drilled and grouted dowels.

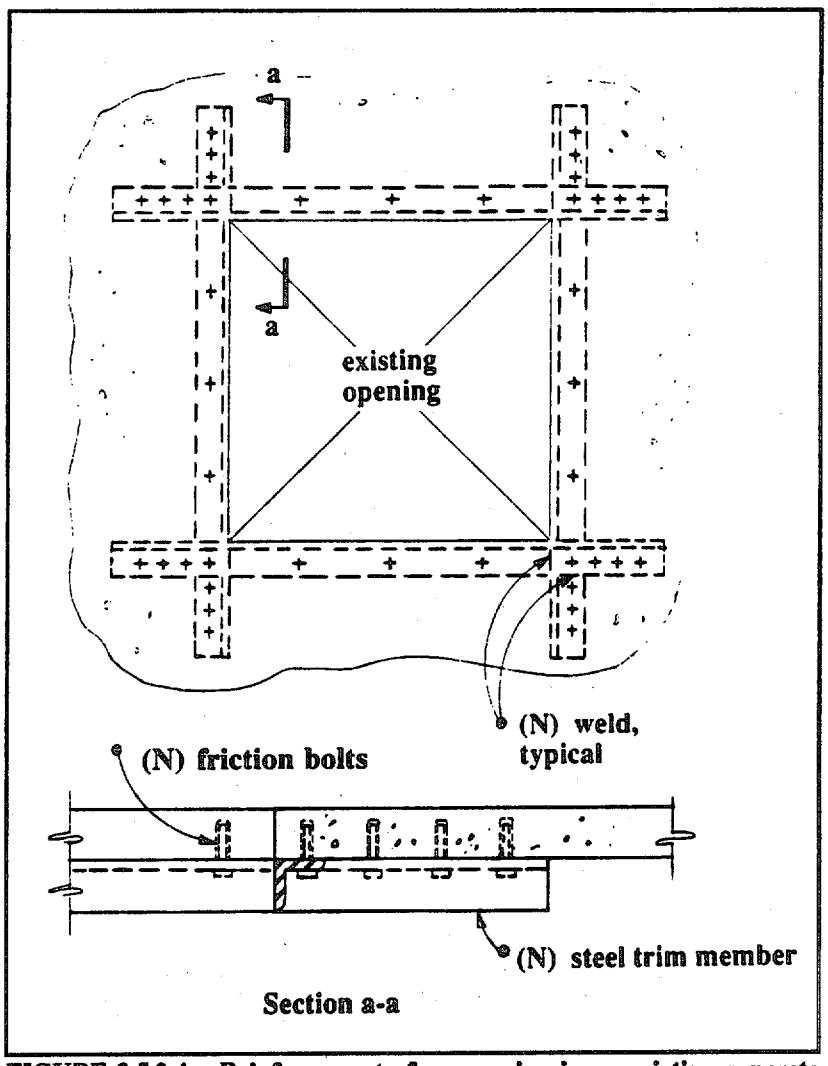

FIGURE 3.5.2.4a Reinforcement of an opening in an existing concrete diaphragm.

2. Increasing the capacity of the concrete by providing a new concrete topping slab in the vicinity of the opening and reinforcing with trim bars (Figure 3.5.2.4b).

3. Removing the stress concentration by filling in the diaphragm opening with reinforced concrete as indicated for shear walls in Figure 3.2.1.2b.

4. Reducing the shear stresses at the location of the openings by adding supplemental vertical-resisting elements (i.e., shear walls or braced frames) as discussed in Sec. 3.4.

Relative Merits. In existing reinforced concrete diaphragms with small openings or low diaphragm shear stress, the existing reinforcement may be adequate. If additional reinforcement is required, Technique 2 (i.e., new trim bars) probably will be the most cost-effective if a new topping slab is required to increase the overall diaphragm shear capacity.

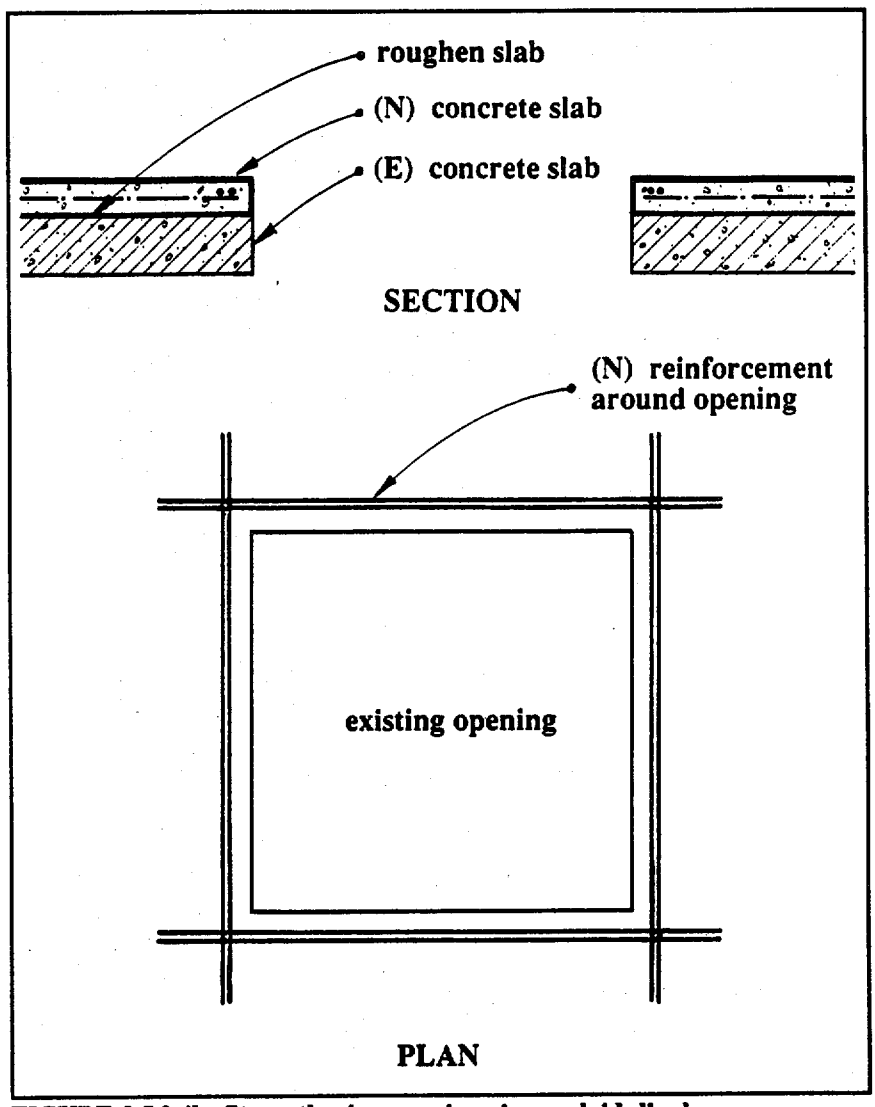

FIGURE 3.5.2.4b Strengthening openings in overlaid diaphragms.

3.5.3 POURED GYPSUM DIAPHRAGMS

3.5.3.1 Deficiencies

Poured gypsum diaphragms may be reinforced or unreinforced and may have the same deficiencies as monolithic concrete diaphragms (see Sec. 3.5.2.1.).

3.5.3.2 Strengthening Techniques for Poured Gypsum Diaphragms

Techniques. Strengthening techniques for deficiencies in poured gypsum diaphragms are similar to those listed for concrete diaphragms (see Sec. 3.5.2.2, 3.5.2.3, and 3.5.2.4); however, the addition of a new horizontal bracing system may be the most effective strengthening alternative.

Relative Merits. Poured gypsum has physical properties similar to those of very weak concrete. Tables of allowable structural properties (i.e., shear, bond, etc.) are published in various building codes and engineering manuals. A typical installation is for roof construction using steel joists. Steel bulb tees, welded or clipped to the joists, span over several joists and support rigid board insulation on the tee flanges. Reinforced or unreinforced gypsum is poured on the insulation board to a depth of 2 or 3 inches, embedding the bulbed stems of the tees. While use of the strengthening techniques discussed for reinforced concrete diaphragms (i.e., reinforced overlays, additional chord reinforcement, etc.) is technically possible, application of these techniques generally is not practical because of the additional weight or low allowable stresses of gypsum. Since dead loads normally constitute a significant portion of the design loads for roof framing members, the addition of several inches of gypsum for a reinforced overlay probably will overstress the existing light steel framing. Similarly, the low allowable stresses for dowels and bolts will allow strengthening of only marginally deficient diaphragms. For these reasons, gypsum diaphragms found to have significant deficiencies may have to be removed and replaced with steel decking or may be strengthened with a new horizontal bracing system (see Figure 3.5.5.2b).

3.5.4 PRECAST CONCRETE DIAPHRAGMS

3.5.4.1 Deficiencies

The principal deficiencies of precast or post-tensioned concrete planks, tees, or cored slabs are:

- Inadequate in-plane shear capacity of the connections between the adjacent units,
- Inadequate diaphragm chord capacity, and
- Excessive in-plane shear stresses at diaphragm openings or plan irregularities.

3.5.4.2 Strengthening Techniques for Inadequate Connection Shear Capacity

Techniques. Deficient in-plane shear capacity of connections between adjacent precast concrete planks, tees, or cored slabs can be improved by:

1. Replacing and increasing the capacity of the existing connections by overlaying the existing diaphragm with a new reinforced concrete topping slab (Figure 3.5.4.2).
2. Reducing the shear forces on the diaphragm by providing supplemental vertical-resisting elements (i.e., shear walls or braced frames) as discussed in Sec. 3.4.

Relative Merits. The capacity of an existing diaphragm composed of precast concrete elements (i.e., cored slabs, tees, planks, etc.) generally is limited by the capacity of the field connections between the precast elements. It may be possible to modify these connections for a moderate increase in diaphragm capacity; however, it usually is not feasible to develop the full shear capacity of the precast units except with an adequately doweled and complete poured-in-place connection. This usually is very costly. Overlaying the existing precast system with a new reinforced concrete topping (Technique 1) is an effective procedure for increasing the shear capacity of the existing diaphragm. Because of the relatively low rigidity of the existing connections, the new topping should be designed to resist the entire design shear. Existing floor diaphragms with precast concrete elements may have a 2- or 3-inch poured-in-place topping with mesh reinforcement to compensate for the irregularities in precast elements. Applying an additional topping slab over the existing slab may be prohibitive because of the additional gravity and seismic loads that must be resisted by the structure. Where mechanical connections between units exist along with a topping slab, the topping slab generally will resist the entire load (until it fails) because of the relative rigidities; therefore, the addition of mechanical fasteners generally is ineffective. For the above reasons the most cost-effective alternative may be reducing the diaphragm shear forces through the addition of supplemental shear walls or braced frames.

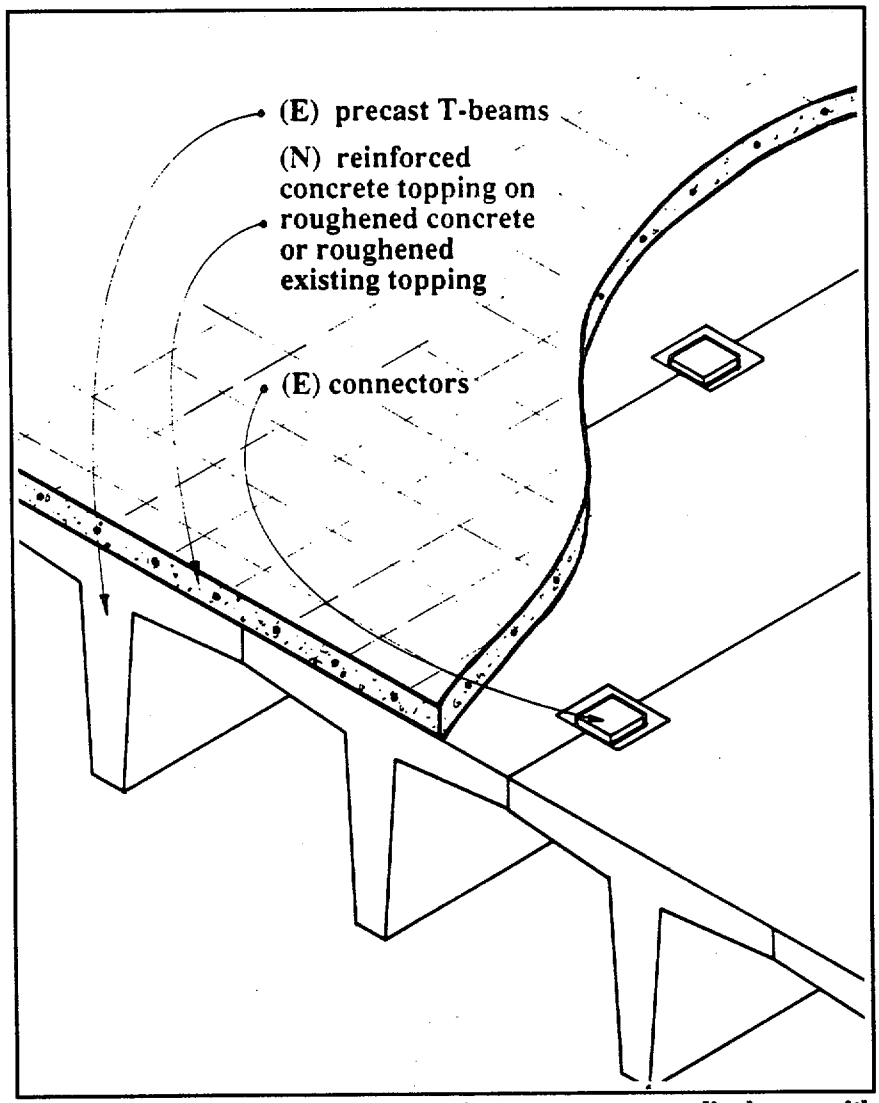

FIGURE 3.5.4.2 Strengthening an existing precast concrete diaphragm with a concrete overlay.

3.5.4.3 Strengthening Techniques for Inadequate Chord Capacity

Techniques. Deficient diaphragm chord capacity of precast concrete planks, tees, or cored slabs can be improved by:

1. Providing a new continuous steel member above or below the steel slab and connecting the new member to the existing slab with bolts (Figure 3.5.4.3).

2. Removing the edge of the diaphragm and casting a new chord member integral with the slab (Figure 3.5.2.3).

3. Reducing the diaphragm chord forces by providing supplemental vertical-resisting elements (i.e., shear walls or braced frames) as discussed in Sec. 3.4.

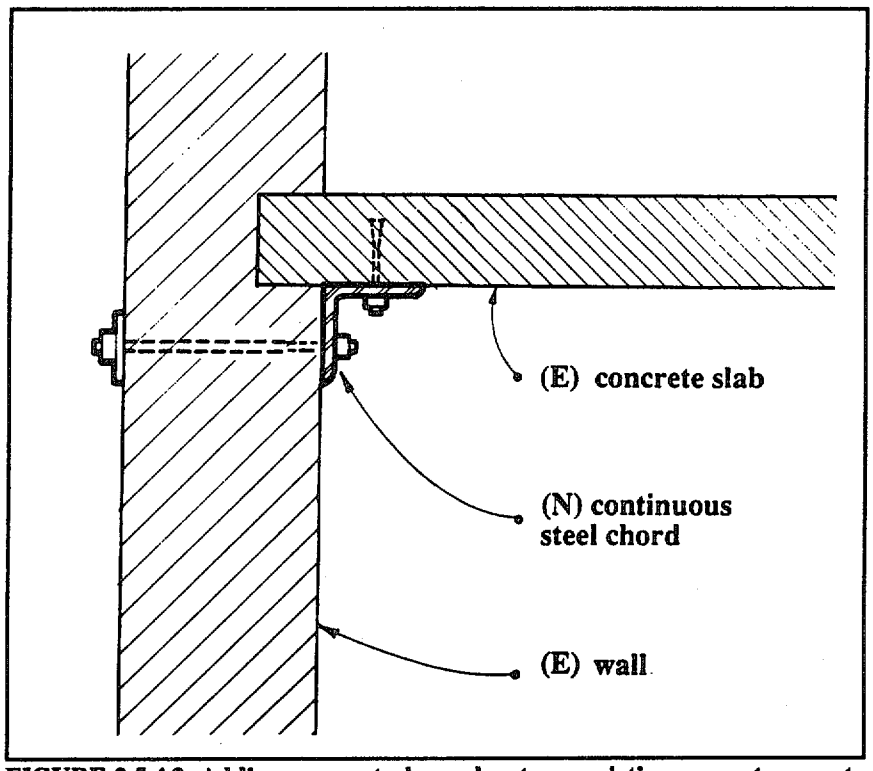

FIGURE 3.5.4.3 Adding a new steel member to an existing precast concrete diaphragm.

Relative Merits. Providing a new steel chord member (Technique 1) generally is the most cost-effective approach to rehabilitating a deficient diaphragm chord for precast concrete elements. When this approach is used; adequate shear transfer between the existing planks or slabs and the new chord member must be provided. Grouting under the new steel chord member may be necessary to accommodate uneven surfaces. Although typically more costly, casting a new chord into the diaphragm (Technique 2) may be considered a viable alternative where the projection caused by a new steel chord member is unacceptable for architectural reasons. If Technique 2 is considered, shoring of the planks or slabs will be necessary during construction. Technique 3 generally would be viable only if it is being considered to improve other deficient conditions.

3.5.4.4 Strengthening Techniques for Excessive Shear Stresses at Openings

Deficient diaphragm shear capacity at diaphragm openings or plan irregularities can be improved by:

1. Reducing the local stresses by distributing the forces along the diaphragm by means of concrete drag struts cast beneath the slab and made integral with the existing slab with drilled and grouted dowels.

2. Increasing the capacity by overlaying the existing slab with a new reinforced concrete topping slab with reinforcing trim bars in the vicinity of the opening (Figure 3.5.4.2).

3. Removing the stress concentration by filling in the diaphragm opening with reinforced concrete (Figure 3.2.1.2b).

4. Reducing the shear stresses at the location of the openings by providing supplemental vertical-resisting elements (i.e., shear walls or braced frames) as discussed in Sec. 3.4.

Relative Merits. The relative merits for rehabilitating excessive shear stresses at openings in precast concrete planks, tees, or core slabs are similar to those discussed in Sec. 3.5.2.4 for cast-in-place concrete diaphragms.

3.5.5 STEEL DECK DIAPHRAGMS

3.5.5.1 Deficiencies

The principal deficiencies in steel deck diaphragms are inadequate in-plane shear capacity which may be governed by the capacity of the welding to the supports or the capacity of the seam welds between the deck units, inadequate diaphragm chord capacity, and excessive in-plane shear stresses at diaphragm openings or plan irregularities.

3.5.5.2 Strengthening Techniques for Inadequate Shear Capacity

Deficient in-plane shear capacity of steel deck diaphragms can be improved by:

1. Increasing the steel deck shear capacity by providing additional welding.

2. Increasing the deck shear capacity of unfilled steel decks by adding a reinforced concrete fill (Figure 3.5.5.2a) or overlaying with concrete filled steel decks a new topping slab.

3. Increasing the diaphragm shear capacity by providing a new horizontal steel bracing system under the existing diaphragm (Figures 3.5.5.2b and 3.5.5.2d).

4. Reducing the diaphragm shear stresses by providing supplemental vertical-resisting elements to reduce the diaphragm span as discussed in Sec. 3.4.

Relative Merits. Steel decking, with or without an insulation fill (e.g., vermiculite or perlite), may be used as a diaphragm whose capacity is limited by the welding to the supporting steel framing and crimping or seam welding of the longitudinal joints of the deck units. The shear capacity of this type of diaphragm may be increased modestly by additional welding (Technique 1) if the shear capacity of the existing welds is less than the allowable shear of the steel deck itself. Significant increases in capacity may be obtained by adding a reinforced concrete fill (Technique 2) and shear studs welded to the steel framing through the decking. This procedure will require the removal of any insulation fill and the removal and replacement of any partitions and floor or roof finishes.

The shear capacity of steel deck diaphragms in open web joists often is limited by the lack of adequate connection from deck to shear wall or other vertical element. The lack of intermediate connectors between joists

is common. Frequently, the joist bearing ends themselves are not well connected to transfer diaphragm shear. Addition of an edge support connected to wall and diaphragm often is feasible.

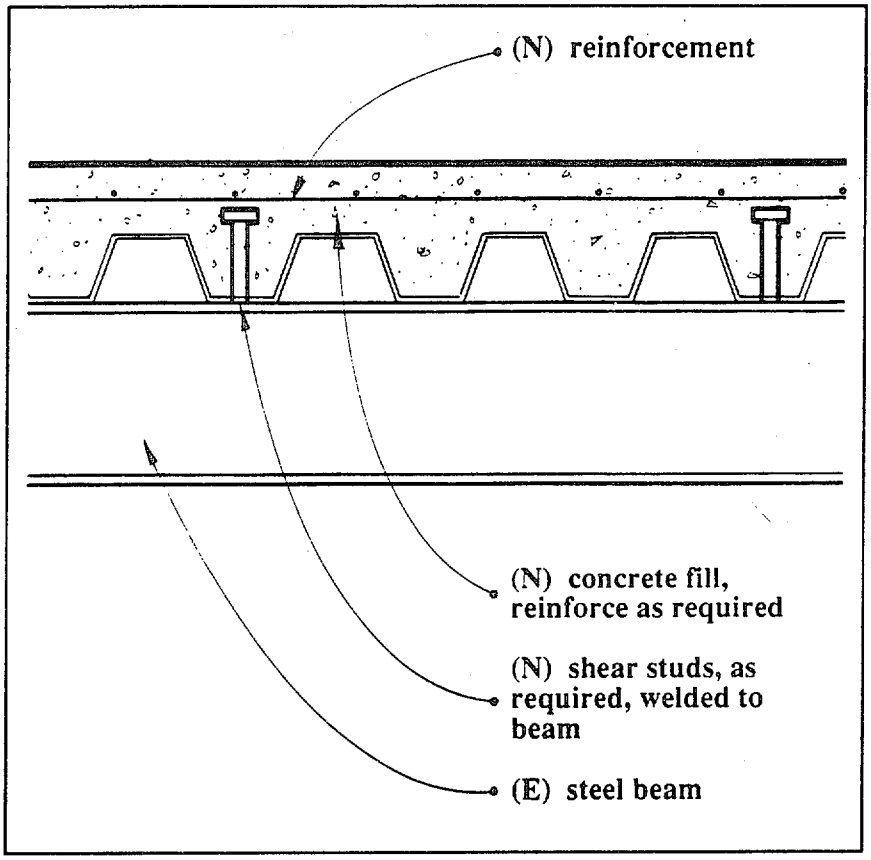

FIGURE 3.5.5.2a Strengthening an existing steel deck diaphragm.

The capacity of steel decking with an existing reinforced concrete fill may be increased by adding a reinforced concrete overlay (Technique 2). Although this is an expedient alternative for increasing the shear capacity of an existing composite steel deck, providing adequate shear transfer to the vertical-resisting members or chord elements through the existing composite decking may require special details (e.g., additional shear studs). Since the addition of a concrete overlay will increase the dead weight of the structure, the existing members, connections, and foundation must be checked to determine whether they are capable of resisting the added loads.

The above alternatives provide positive, direct methods for strengthening an existing steel deck diaphragm. Both alternatives require complete access to the top of the diaphragm and the removal and replacement of partitions and floor finishes. Technique 2 (i.e., topping over an existing concrete fill) will change the finished floor elevation by several inches and will therefore require a number of nonstructural adjustments to the new elevation (e.g., to stairs, elevators, floor electrical outlets, etc.).

An additional alternative for strengthening steel decking without concrete fill is to add new horizontal bracing under the decking (Technique 3). Since steel decking generally is supported on structural steel framing, the existing framing with new diagonal members forms the horizontal bracing system. The diaphragm shears are shared with the existing decking in proportion to the relative rigidity of the two systems. This alternative requires access to the underside of the floor or roof framing and may require relocation of piping, ducts, or electrical conduit as well as difficult and awkward connections to the existing framing. These costs must be weighed against the costs for a concrete overlay. It should be noted that this alternative may not be feasible for steel decking with a composite concrete fill because of the much greater rigidity of the existing composite diaphragm compared with that of the bracing system. For the bracing system to be effective in this case, the diaphragm shears would be distributed on the basis of the bracing system and the steel decking without the concrete fill (i.e., failure of the concrete fill in shear would be assumed to be acceptable). The new horizontal bracing system will require continuous chord or collector members (Figure 3.5.5.2d) to receive the bracing forces and transfer them to shear walls or other vertical-resisting elements. In Figure 3.5.5.2d, a tubular steel member is a preferred section for the new bracing members as is the tee section in Section a-a for the chord or collector members. Where existing construction does not permit the use of the tee section, an angle may be used as shown in Section b-b. In the latter case, bending of the angle and prying action on the anchor bolts may need to be investigated.

Reduction of the existing diaphragm stresses to acceptable levels by providing additional shear walls or vertical bracing (Technique 4) also may be a feasible alternative. The choice between shear walls or bracing will depend on compatibility with the existing vertical-resisting elements (i.e., additional shear walls should be considered for an existing shear wall system and additional bracing for an existing bracing system). The

appropriateness of this technique (as discussed above) depends on the extent to which new foundations will be required and potential interference with the functional use of the building.

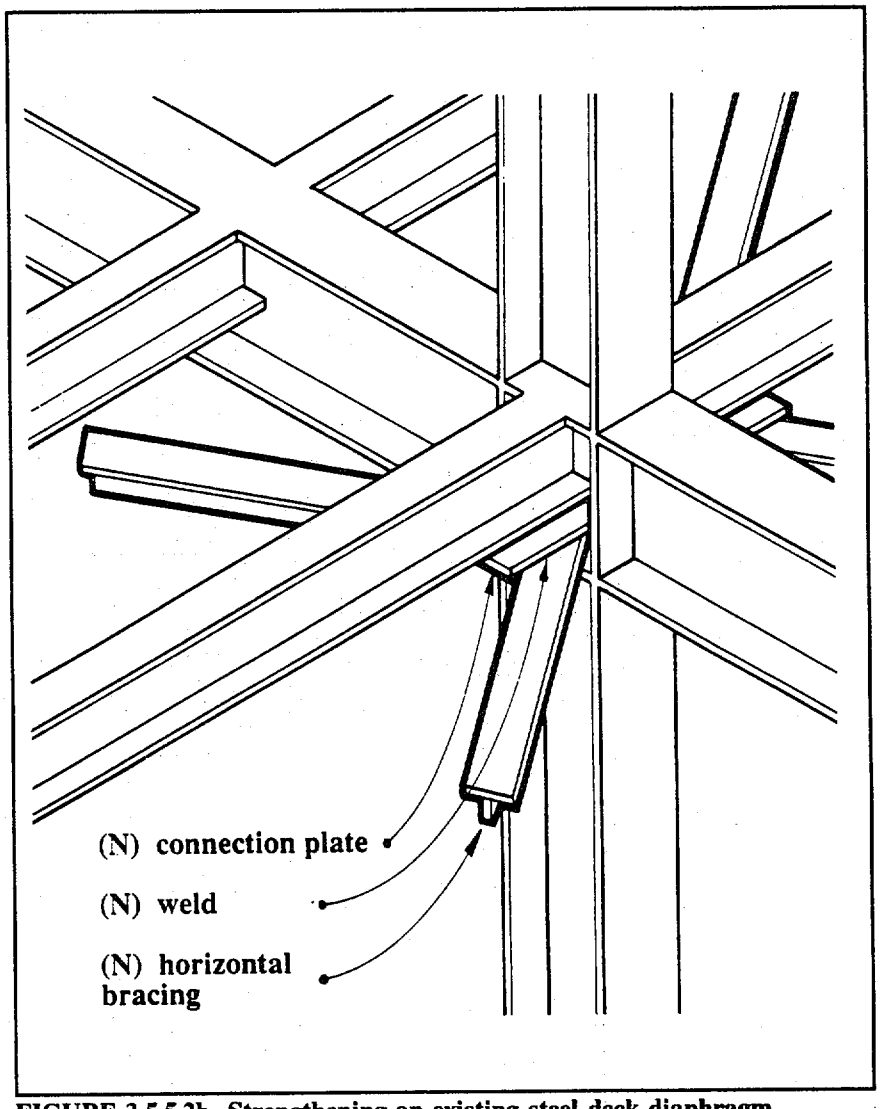

FIGURE 3.5.5.2b Strengthening an existing steel deck diaphragm.

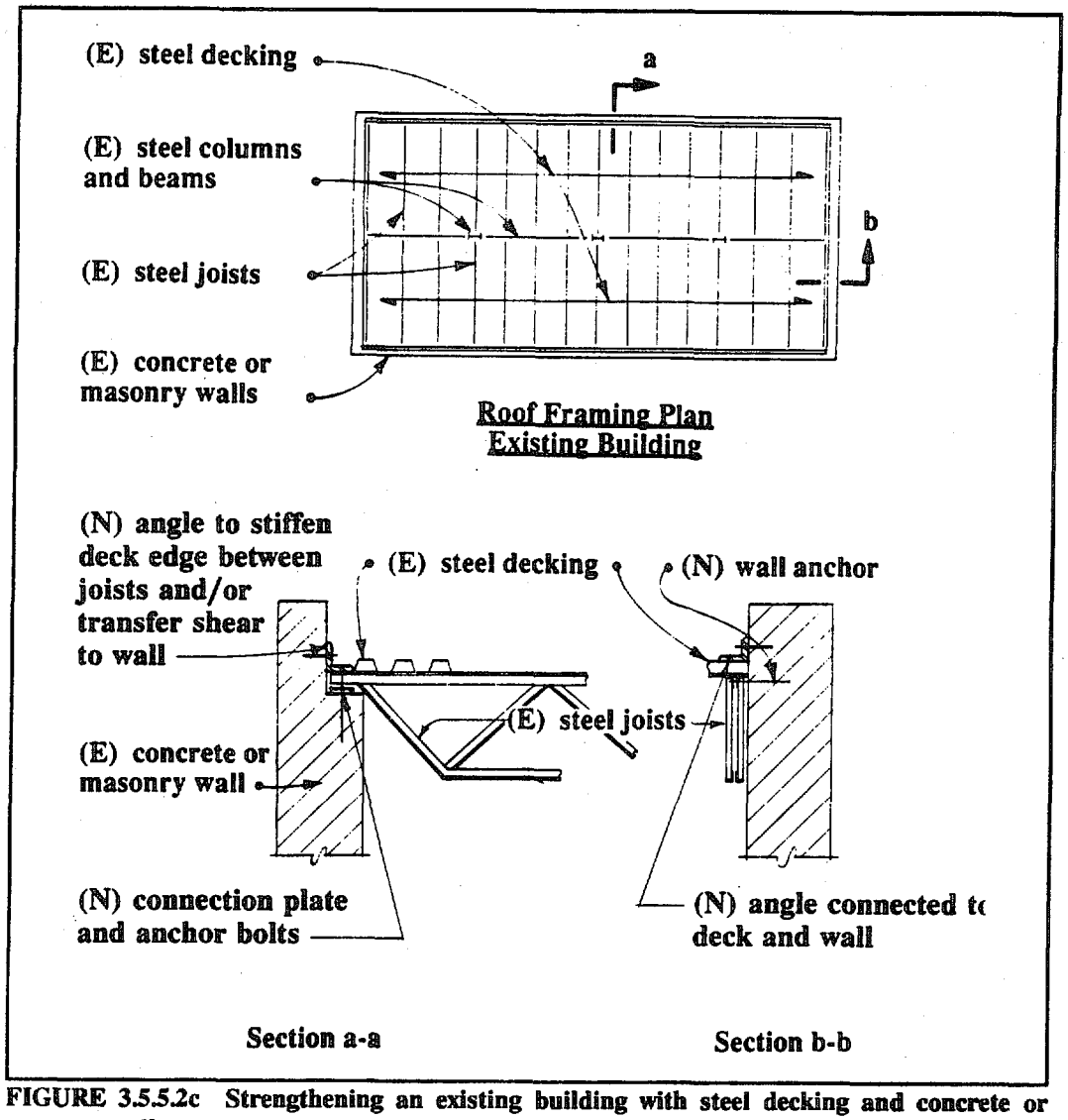

FIGURE 3.5.5.2c Strengthening an existing building with steel decking and concrete or masonry walls.

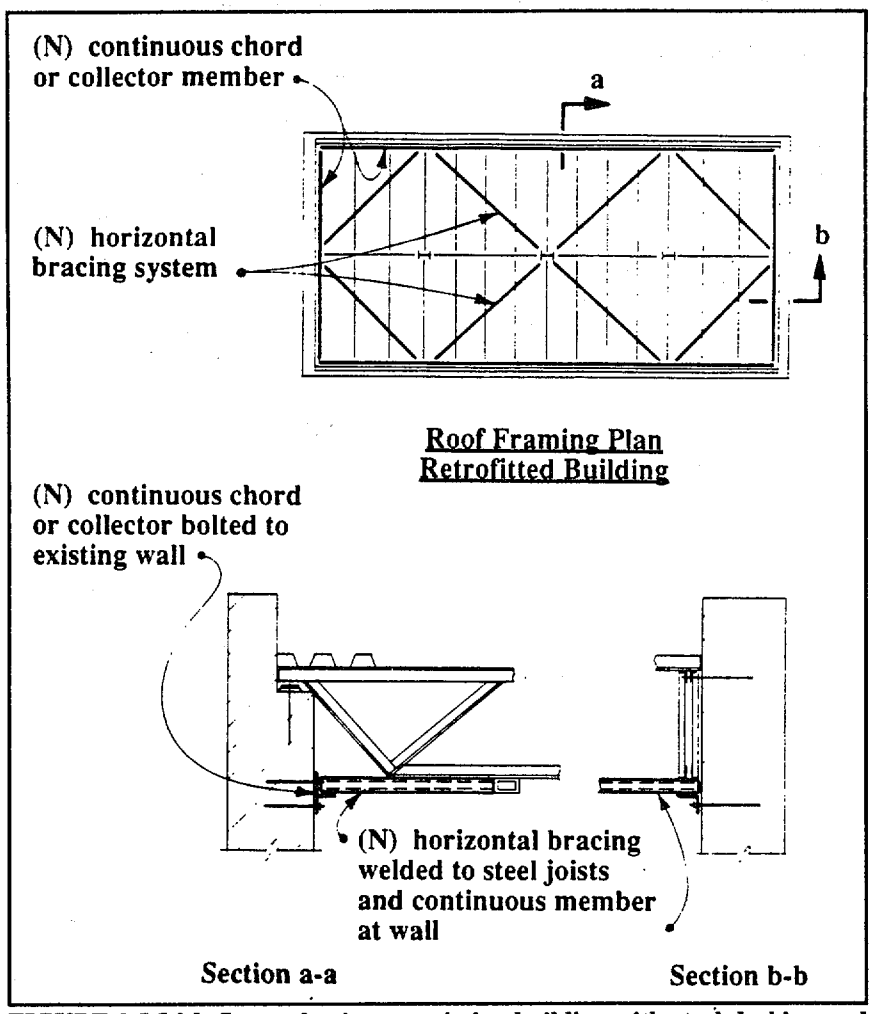

FIGURE 3.5.5.2d Strengthening an existing building with steel decking and concrete or masonry walls.

3.5.5.3 Strengthening Techniques for Inadequate Chord Capacity

Techniques. Deficient chord capacity of steel deck diaphragms can be improved by:

1. Increasing the chord capacity by providing welded or bolted continuity splices in the perimeter chord steel framing members.

2. Increasing the chord capacity by providing a new continuous steel member on top or bottom of the diaphragm (Figure 3.5.4.3).

3. Reducing the diaphragm chord stresses by providing supplemental vertical-resisting elements (i.e., shear walls or braced frames) such that the diaphragm span is reduced as discussed in Sec. 3.4.

Relative Merits. Steel decking generally is constructed on steel framing. The perimeter members of the steel framing typically will have sufficient capacity to resist the diaphragm chord stresses provided the shear capacity of the connections between the decking and the chord member and the tensile capacity of the steel framing connections are adequate to transfer the prescribed loads. Increasing the capacity of these connections by

providing additional plug welds to the decking or adding steel shear studs in the case of concrete-filled metal decking may be required. Technique 1 generally is the most cost-effective.

Increasing the chord capacity by providing a new steel chord member to the perimeter of the diaphragm (Technique 2) would be appropriate only if it was impractical to use an existing member (Technique 1).

Reducing the diaphragm chord stresses by providing supplemental shear walls or braced frames (Technique 3) generally would not be cost-effective to correct a chord capacity problem unless it is being seriously considered to improve other component deficiencies as well.

3.5.5.4 Strengthening Techniques for Excessive Shear Stresses at Openings

Techniques. Excessive shear stresses at diaphragm openings or plan irregularities can be improved by:

1. Reducing the local stress concentrations by distributing the forces into the diaphragm by means of steel drag struts.

2. Increasing the capacity of the diaphragm by reinforcing the edge of the opening with a steel angle frame welded to the decking.

3. Reducing the diaphragm stresses by providing supplemental vertical-resisting elements (i.e., shear walls, braced frames or new moment frames) such that the diaphragm span is reduced as discussed in Sec. 3.4.

Relative Merits. Openings and plan irregularities in steel deck diaphragms generally are supported along the perimeter by steel beams. If continuous past the corners of the openings or irregularities, these beams can distribute the concentrated stresses into the diaphragm provided the capacity of the connections between the decking and the steel beams is adequate to transfer the prescribed loads. If inadequate, the connections can be reinforced by adding plug welds or shear studs.

If beams are not continuous beyond an opening or irregularity, new beams to act as drag struts can be provided (Technique 1). Adequate connection of the beams to the diaphragm and to the existing beams will be required to distribute loads.

Correcting the diaphragm deficiency by providing a steel frame around the perimeter of the opening or along the sides of the irregularity (Technique 2) is similar to providing drag struts. The connection between the new steel members and the diaphragm must be sufficient to adequately distribute the local stresses into the diaphragm. The dimensions of the opening or irregularity will dictate whether this can be achieved solely with the use of a perimeter steel frame.

Reducing the diaphragm stresses by providing supplemental shear walls or braced frames (Technique 3) generally would not be cost-effective to correct a diaphragm opening deficiency unless it also was being considered to improve other component deficiencies.

3.5.6 HORIZONTAL STEEL BRACING

3.5.6.1 Deficiency

The principal deficiency in horizontal steel bracing systems is inadequate force capacity of the members (i.e., bracing and floor or roof beams) and/or the connections.

3.5.6.2 Strengthening Techniques for Braces or Beams

Techniques. Deficient horizontal steel bracing system capacity can be improved by:

1. Increasing the capacity of the existing bracing members or removing and replacing them with new members and connections of greater capacity.

2. Increasing the capacity of the existing members by reducing unbraced lengths.

3. Increasing the capacity of the bracing system by adding new horizontal bracing members to previously unbraced panels (if feasible).

4. Increasing the capacity of the bracing system by adding a steel deck diaphragm to the floor system above the steel bracing.

5. Reducing the stresses in the horizontal bracing system by providing supplemental vertical-resisting elements (i.e., shear walls or braced frames) as discussed in Sec. 3.4.

Relative Merits. Horizontal bracing systems to resist wind or earthquake forces have been in common use for many years in steel-framed industrial buildings. These bracing systems generally are integrated with the existing floor or roof framing systems, and the capacity of the bracing system should be governed by the diagonal braces and their connections. If the structural analysis indicates that the existing floor or roof framing members in the bracing systems do not have adequate capacity for the seismic loads, providing additional bracing or other lateral-load-resisting elements may be a cost-effective alternative to strengthening these members.

Simple strengthening techniques include increasing the capacity of the existing braces and their connections (e.g., single-angle bracing could be doubled, double-angle bracing could be "starred") as well as removing existing braces and replacing them with stronger braces and connections (Technique 1). If the compressive capacity of the elements is the primary deficiency, providing a system of secondary braces that reduces the unbraced lengths (Technique 2) of the members may be cost-effective. The existing connections must be investigated and, if found to be inadequate, the connections will need to be strengthened. Technique 3 (providing horizontal braces in adjacent unbraced panels if present) may be a very cost-effective approach to increasing the horizontal load capacity.

Existing horizontal bracing systems often do not have an effective floor diaphragm and new floor or roof diaphragm consisting of a reinforced concrete slab or steel decking with or without concrete fill can be provided to augment or replace the horizontal bracing systems (Technique 4). A steel deck diaphragm may be designed to augment the horizontal bracing, but a concrete slab probably would make the bracing ineffective because of the large difference in rigidities. The concrete slab therefore would need to be designed to withstand the entire lateral load.

As with other diaphragms, it may be possible to reduce diaphragm stresses to acceptable limits by providing additional shear walls or vertical bracing (Technique 5). However, unlike true diaphragm systems, a horizontal bracing system may not have the same shear capacity at any section (e.g., a simple bracing system between two end walls may have increasing shear capacity from the center towards each end). In some cases, additional vertical-resisting elements can increase the stresses in some of the elements of the existing bracing systems.

3.6 FOUNDATIONS

Deficient foundations occasionally are a cause for concern with respect to the seismic capacity of existing buildings. Because the foundation loads associated with seismic forces are transitory and of very short duration, allowable soil stresses for these loads, combined with the normal gravity loads, may be permitted to approach ultimate stress levels. Where preliminary analysis indicates that there may be significant foundation problems, recommendations from a qualified geotechnical engineer should be required to establish rational criteria for the foundation analysis.

3.6.1 CONTINUOUS OR STRIP WALL FOOTINGS

3.6.1.1 Deficiencies

The principal deficiencies in the seismic capacity of existing continuous or strip wall footings are:

- Excessive soil bearing pressure due to overturning forces and
- Excessive uplift conditions due to overturning forces.

3.6.1.2 Strengthening Techniques for Excessive Soil Bearing Pressure

Techniques. The problem of excessive soil bearing pressure caused by seismic overturning forces can be mitigated by:

1. Increasing the bearing capacity of the footing by underpinning the footing ends and providing additional footing area (Figure 3.6.1.2a).
2. Increasing the vertical capacity of the footing by adding new drilled piers adjacent and connected to the existing footing (Figure 3.6.1.2b).
3. Increasing the soil bearing capacity by modifying the existing soil properties.
4. Reducing the overturning forces by providing supplemental vertical-resisting elements (i.e., shear walls or braced frames).

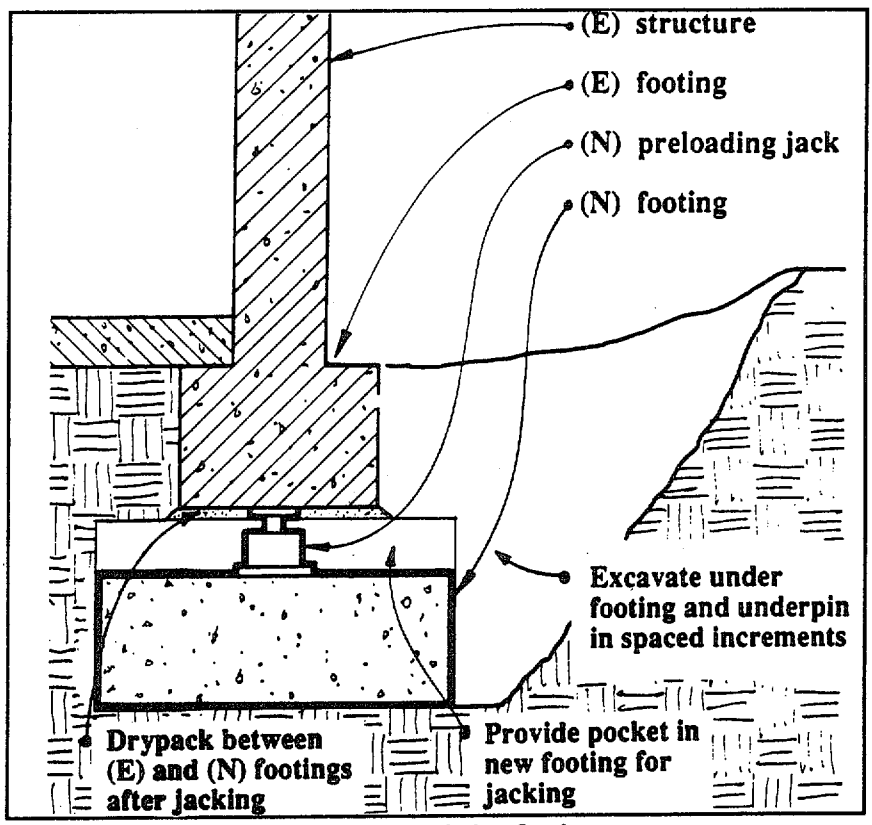

FIGURE 3.6.1.2a Underpinning an existing footing.

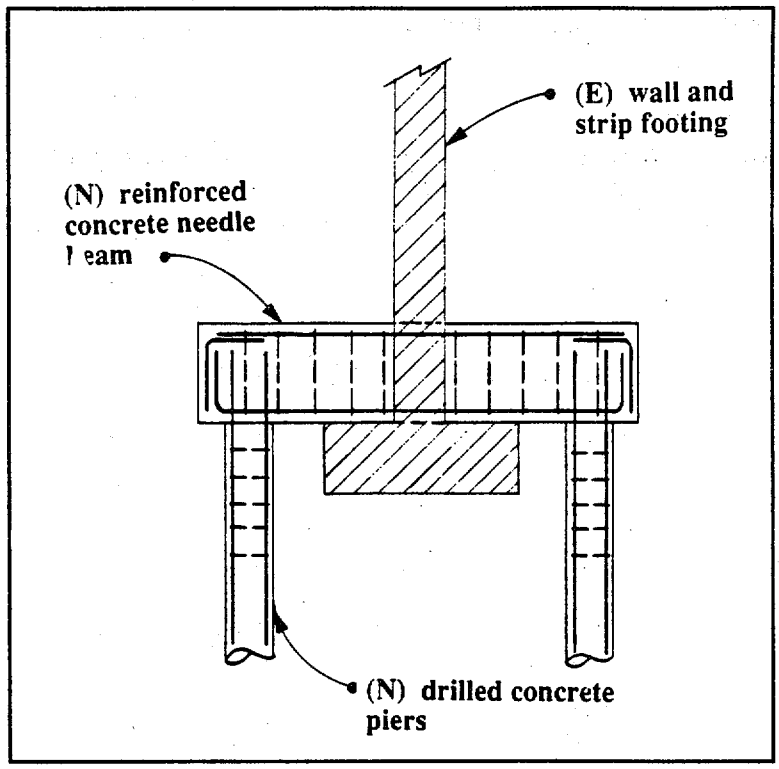

FIGURE 3.6.1.2b Strengthening an existing wall footing by the addition of drilled piers.

Relative Merits. The most effective procedure for correcting excessive soil pressure due to seismic overturning forces generally is to underpin the ends of the footing and to construct a larger footing under each end of the existing footing (Technique 1). The new footing should be constructed in staggered increments, and each increment should be preloaded by jacking prior to transfer of the load from the existing footing. An alternative procedure is to provide a drilled pier on each side and at each end of the wall (Technique 2). The reinforced concrete piers should be cast-in-place in uncased holes so as to develop both tension and compression. Each pier should extend above the bottom of the footing and be connected by a reinforced concrete beam through the existing wall above the footing (Figure 3.6.1.2.b).

Techniques 1 and 2 are costly and disruptive. For this reason, when seismic upgrading results in increased forces that require foundation strengthening, it may be cost-effective to consider other seismic upgrading schemes. Soil conditions may be such that modifying the capacity of existing soils is the most viable alternative. The soil beneath structures founded on clean sand can be strengthened through the injection of chemical grouts. The bearing capacity of other types of soils can be strengthened by compaction grouting. With chemical grouting, chemical grout is injected into clean sand in a regular pattern beneath the foundation. The grout mixes with the sand to form a composite material with a significantly higher bearing capacity. With compaction grouting, grout also is injected in a regular pattern beneath the foundation but it displaces the soil away from the pockets of injected grout rather than dispersing into the soil. The result of the soil displacement is a densification of the soil and, hence, increased bearing capacity. Some disruption of existing floors adjacent to the subject foundations may be required in order to cut holes needed for uniform grout injection. Alternatively, seismic forces on the footing can be reduced by adding other vertical-resisting elements such as bracing, shear walls, or buttresses.

3.6.1.3 Strengthening Techniques for Excessive Uplift Conditions

Techniques. Deficient capacity of existing foundations to resist prescribed uplift forces caused by seismic overturning moments can be improved by:

1. Increasing the uplift capacity of the existing footing by adding drilled piers or soil anchors.

2. Increasing the size of the existing footing by underpinning to mobilize additional foundation and soil weight.

3. Reducing the uplift forces by providing supplemental vertical-resisting elements (i.e., shear walls or braced frames) as discussed in Sec. 3.4.

Relative Merits. Any seismic rehabilitation alternative that requires significant foundation work will be costly. Access for heavy equipment (e.g., drilling rigs, backhoes, and pile drivers), ease of material handling, and the need to minimize the disruption of the functional use of the building are a few of the reasons why exterior foundation rehabilitation work will be significantly less costly than interior work.

Providing a significant increase in the uplift capacity of an existing foundation generally is most effectively achieved by adding drilled piers or soil anchors (Technique 1). Reinforced concrete piers can be provided adjacent to the footing and connected to the existing footing with steel or concrete beams (Figure 3.6.1.2b). Locating the piers symmetrically on both sides of the footing will minimize connections that must transfer eccentric loads. The details for eccentric connections may not always be feasible. However, providing concentric drilled piers almost ensures that interior foundation work will be needed.

Soil anchors similar to those used to tie-back retaining walls also can be used instead of drilled piers. Hollow core drill bits from 6 inches to 2 feet in diameter can be used to drill the needed deep holes. After drilling, a deformed steel tension rod is placed into the hole through the center of the bit. As the bit is withdrawn, cement grout is pumped through the stem of the bit bonding to the tension rod and the soil. These types of soil anchors can provide a significant tensile capacity. Drilling rigs are available that can drill in the interior of buildings even with low headroom; however, this is more costly.

Underpinning the ends of the footing to create a wider bearing area at each end has the beneficial effect of reducing the uplift by increasing the area, the moment of inertia, and the dead load of the existing footing. Although this may be a feasible alternative, it is usually less cost-effective than adding drilled piers or soil anchors. The size of the necessary footing addition becomes prohibitive if substantial uplift forces need to be resisted.

As with other rehabilitation techniques, reducing the overturning forces by providing additional vertical-resisting elements (Technique 3) such as braced frames, shear walls, or buttresses may be viable. The addition of buttresses may transfer loads to the exterior of the building where foundation work may not be so costly.

Some engineers believe that uplifting of the ends of rigid shear walls is not a deficiency and may actually be beneficial in providing a limit to the seismic base shear. Others design the structure for the overturning forces but ignore the tendency of the foundation to uplift. If the foundations are permitted to uplift, the engineer must investigate the redistribution of forces in the wall and in the soil due to the shift in the resultant of the soil pressure and also the potential distortion of structural and nonstructural elements framing into the wall.

3.6.2 INDIVIDUAL PIER OR COLUMN FOOTINGS

3.6.2.1 Deficiencies

The principal deficiencies in the seismic capacity of existing individual pier or column footings are:

- Excessive soil bearing pressure due to overturning forces,

- Excessive uplift conditions due to overturning forces, and

- Inadequate passive soil pressure to resist lateral loads.

3.6.2.2 Strengthening Techniques for Excessive Soil Bearing Pressure

Techniques. The problem of excessive soil bearing pressure due to overturning forces can be mitigated by:

1. Increasing the bearing capacity of the footing by underpinning the footing ends and/or providing additional footing area (Figure 3.6.1.2a).

2. Increasing the vertical capacity of the footing by adding new drilled piers adjacent and connected to the existing footing (Figure 3.6.1.2b).

3. Reducing the bearing pressure on the existing footings by connecting adjacent footings with deep reinforced concrete tie beams.

4. Increasing the soil bearing capacity by modifying the existing soil properties.

5. Reducing the overturning forces by providing supplemental vertical-resisting elements (i.e., shear walls or braced frames).

Relative Merits. The considerations in selecting alternatives to correcting excessive soil bearing pressure due to overturning forces in individual pier or column footings are similar to those discussed above for continuous or strip footings. There is, however, the additional alternative of tying adjacent footings together with a deep reinforced concrete beam (Technique 3), which may be a feasible means of distributing the forces resulting from the overturning moment to adjacent footings.

3.6.2.3 Strengthening Techniques for Excessive Uplift Conditions

Techniques. Deficient capacity of existing foundations to resist the prescribed uplift forces caused by seismic overturning moments can be improved by:

1. Increasing the uplift capacity of the existing footing by adding drilled piers or soil anchors.

2. Increasing the size of the existing footing to mobilize additional foundation and soil weight.

3. Increasing the uplift capacity by providing a new deep reinforced concrete beam to mobilize the dead load on an adjacent footing.

4. Reducing the uplift forces by providing supplemental vertical-resisting elements (i.e., shear walls or braced frames).

Relative Merits. The considerations in selecting techniques to correct excessive uplift conditions due to overturning forces in individual pier or column footings are similar to those discussed above for continuous or strip footings. Technique 2 is appropriate only when excessive uplift results from combined vertical loads and moments on the footing. There is, however, the additional alternative of tying adjacent footings together with a deep reinforced concrete beam (Technique 3), which may be a feasible means for mobilizing the existing mass supported by an adjacent footing.

3.6.2.4 Strengthening Techniques for Inadequate Passive Soil Pressure

Techniques. The problem of excessive passive soil pressure caused by seismic loads can be mitigated by:

1. Providing an increase in bearing area by enlarging the footing.

2. Providing an increase in bearing area by adding new tie beams between existing footings.

3. Improving the existing soil conditions adjacent to the footing to increase the allowable passive pressure.

4. Reducing the bearing pressure at overstressed locations by providing supplemental vertical-resisting elements such as shear walls or braced frames as discussed in Sec. 3.4.

Relative Merits. As noted above, foundation rework generally is relatively costly. The foundation strengthening technique that is the most cost-effective generally is the technique that can resolve more than one concern. The addition of a new deep tie beam between adjacent footings if required to resist overturning forces will likely address inadequate passive soil pressure concerns. As the above discussion indicates, the most cost-effective alternative to the strengthening of an existing foundation usually is not readily apparent. Several alternative schemes may have to be developed to the point where reasonable cost estimates can be made to evaluate the tangible costs (i.e., the total actual work that needs to be accomplished) as well as the disruption or relocation of an ongoing function and the architectural considerations.

3.6.3 PILES OR DRILLED PIERS

3.6.3.1 Deficiencies

The principal deficiencies in the seismic capacity of piles or drilled piers are:

- Excessive tensile or compressive loads on the piles or piers due to the seismic forces combined with the gravity loads and

- Inadequate lateral force capacity to transfer the seismic shears from the pile caps and the piles to the soil.

3.6.3.2 Strengthening Techniques for Excessive Tensile or Compressive Loads

Techniques. Deficient tensile or compressive capacity of piles or piers can be improved by:

1. Increasing the capacity of the foundation by driving additional piles and replacing or enlarging the existing pile cap (Figure 3.6.3.2).

2. Reducing the loads on overstressed pile caps by adding tie beams to adjacent pile caps and distributing the loads.

Relative Merits. Although it may be possible to drive additional piles to correct the deficiency, it usually is very difficult to utilize the existing pile cap to distribute the loads effectively to both old and new piles. It then may be necessary to consider temporary shoring of the column or other structural members supported by the pile caps so that the pile caps can be removed and replaced with a new pile cap that will include the new piles.

As discussed above for individual footings, it may be more cost-effective to provide deep tie beams to distribute some of the pile load to adjacent pile caps that may have excess capacity than to drive new piles.

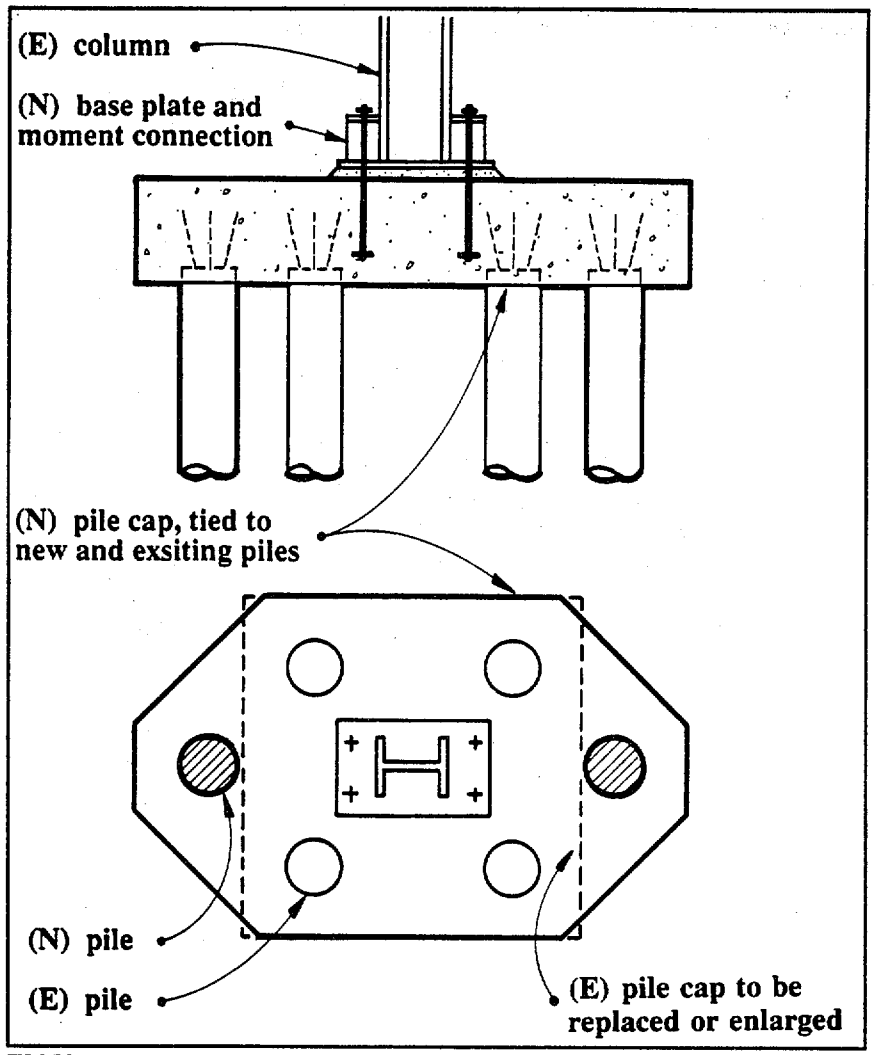

FIGURE 3.6.3.2 Upgrading an existing pile foundation.

3.6.3.3 Strengthening Techniques for Excessive Lateral Forces

Techniques. Deficient lateral force capacity of piles or piers can be improved by:

1. Reducing the loads on overstressed pile caps by adding tie beams to adjacent pile caps and distributing the loads.

2. Increasing the allowable passive pressure of the soil by improving the soil adjacent to the pile cap.

3. Increasing the capacity of the foundation by driving additional piles and replacing or enlarging existing pile cap.

4. Reducing loads on the piles or piers by providing supplemental vertical-resisting elements (i.e., braced frames or shear walls) and transferring forces to other foundation members with reserve capacity as discussed in Sec. 3.4.

Relative Merits. The most cost-effective approach may be to provide tie beams between piers or pile caps (Technique 1). The tie beams will distribute loads between foundation elements as well as provide additional surface area to mobilize additional passive pressure. In specific situations, the other alternatives may be more

cost-effective depending upon accessibility as well as the impact each alternative may have on the ongoing functional use of the building.

3.6.4 MAT FOUNDATIONS

3.6.4.1 Deficiencies

Seismic deficiencies in mat foundations are not common; however, the following two deficiencies can occur:

- Inadequate moment capacity to resist combined gravity plus seismic overturning forces and
- Inadequate passive soil pressure to resist sliding.

3.6.4.2 Strengthening Technique for Inadequate Moment Capacity

Deficient mat foundation moment capacity can be corrected by increasing the mat capacity locally by providing additional reinforced concrete (i.e., an inverted column capital) doweled and bonded to the existing mat to act as a monolithic section. If the inadequacy is due to concentrated seismic overturning loads, it may be possible to provide new shear walls above the mat to distribute the overturning loads and also to locally increase the section modulus of the mat.

3.6.4.3 Strengthening Technique for Inadequate Lateral Resistance

Deficient mat foundation lateral resistance (e.g., the possibility of a mat founded at shallow depth in the soil) can be corrected by the construction of properly spaced shear keys at the mat perimeter. The shear keys would be constructed by trenching under the mat, installing dowels on the underside of the mat, and placing reinforced concrete in the trench.

3.7 DIAPHRAGM TO VERTICAL ELEMENT CONNECTIONS

Seismic inertial forces originate in all elements of buildings and are delivered through structural connections to horizontal diaphragms. The diaphragms distribute these forces to vertical elements that transfer the forces to the foundation.

An adequate connection between the diaphragm and the vertical elements is essential to the satisfactory performance of any structure. The connections must be capable of transferring the in-plane shear stress from the diaphragms to the vertical elements and of providing support for out-of-plane forces on the vertical elements.

The following types of diaphragms are discussed below: timber, concrete, precast concrete, steel deck without concrete fill, steel deck with concrete fill, and horizontal steel bracing.

3.7.1 CONNECTIONS IN TIMBER DIAPHRAGMS

3.7.1.1 Deficiencies

The principal connection deficiencies in timber diaphragms are:

- Inadequate capacity to transfer in-plane shear at the connection of the diaphragm to interior shear walls or vertical bracing,

- Inadequate capacity to transfer in-plane shear at the connection of the diaphragm to exterior shear walls or vertical bracing, and

- Inadequate out-of-plane anchorage at the connection of the diaphragm to exterior concrete or masonry walls.

3.7.1.2 Strengthening Techniques for Interior Shear Wall Connections

Deficient shear transfer capacity of a diaphragm at the connection to an interior shear wall or braced frame can be improved by:

1. Increasing the shear transfer capacity of the diaphragm local to the connection by providing additional nailing to existing or new blocking (Figure 3.7.1.2a).

2. Reducing the local shear transfer stresses by distributing the forces from the diaphragm by providing a collector member to transfer the diaphragm forces to the shear wall (Figure 3.7.1.2b).

3. Reducing the shear transfer stress in the existing connection by providing supplemental vertical-resisting elements as discussed in Sec. 3.4.

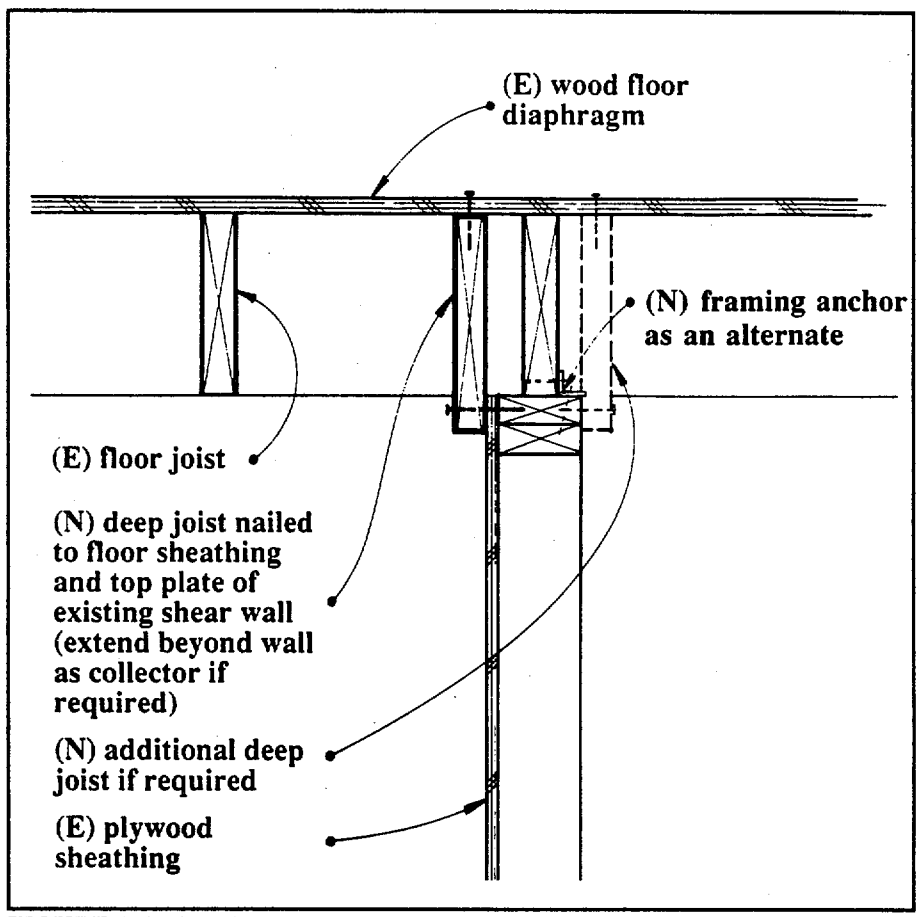

FIGURE 3.7.1.2a Strengthening the connection of a diaphragm to an interior shear wall (wall parallel to floor joist).

Relative Merits. If the shear transfer deficiency is governed by the existing nailing, the most cost-effective alternative most likely is to provide additional nailing (Technique 1); however, stripping of the flooring or roofing surface is required. If it is not feasible to provide adequate additional nailing within the length of the shear wall, the installation of a collector (Technique 2) probably will be the most cost-effective alternative. As indicated in the detail on the left of Figure 3.7.1.2b, if the nailing of the diaphragm to the new blocking is inadequate to transfer the desired shear force over the length of the shear wall, a drag strut or collector member should be provided and the new blocking extended as required beyond the end of the shear wall. The shear force is collected in the drag strut and transferred to the shear wall with more effective nailing or bolting. The new lumber must be dimensionally stable and cut to size.

Technique 3 (i.e., providing additional vertical-resisting elements) usually involves construction of additional interior shear walls or exterior buttresses. This alternative generally is more expensive than the other two because of the need for new foundations and for drag struts or other connections to collect the diaphragm shears for transfer to the new shear walls or buttresses.

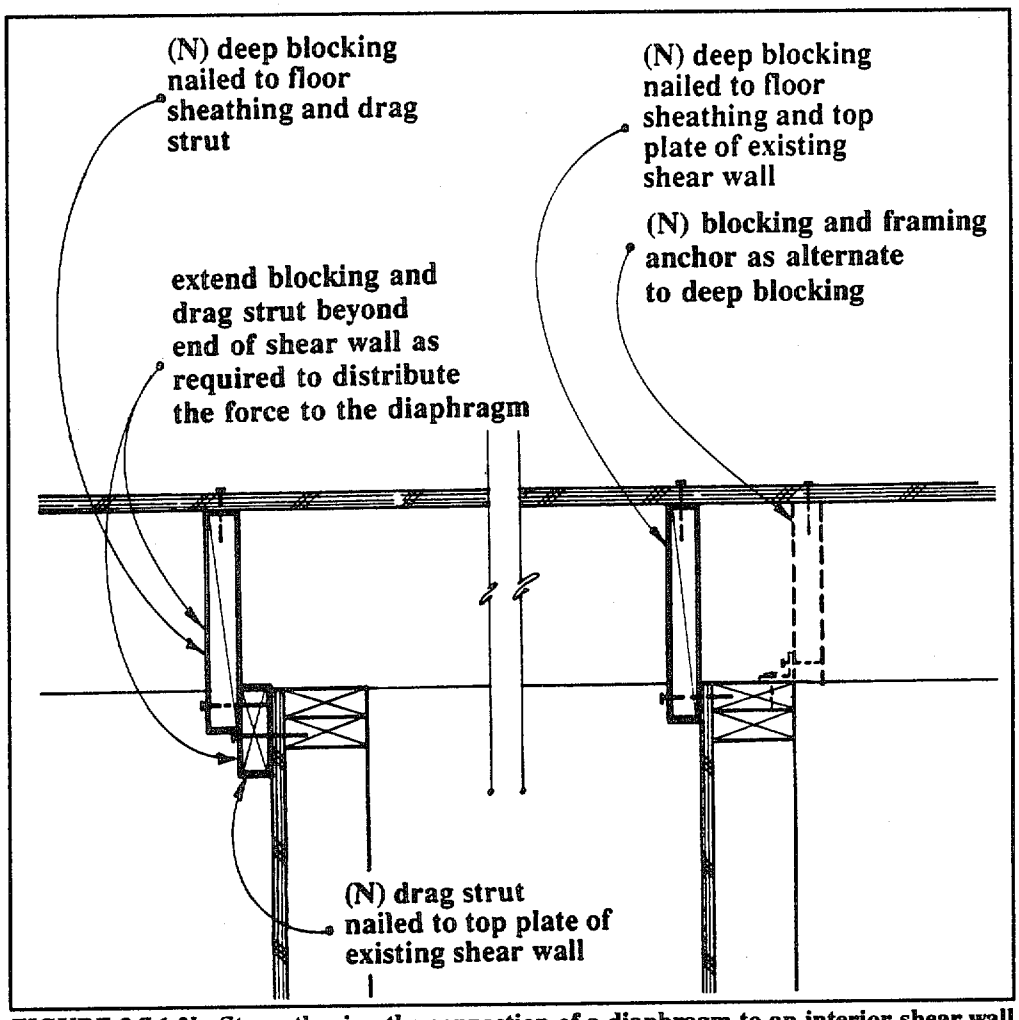

FIGURE 3.7.1.2b Strengthening the connection of a diaphragm to an interior shear wall (wall perpendicular to floor joist).

3.7.1.3 Strengthening Techniques for In-Plane Shear Transfer Capacity to Exterior Walls

Techniques. Deficient in-plane shear transfer capacity of a diaphragm to exterior shear walls or braced frames can be improved by:

1. Increasing the capacity of existing connections by providing additional nailing and/or bolting.

2. Reducing the local shear transfer stresses by distributing the forces from the diaphragm by providing chords or collector members to collect and distribute shear from the diaphragm to the shear wall or bracing (Figure 3.7.1.3).

3. Reducing the shear stress in the existing connection by providing supplemental vertical-resisting elements as discussed in Sec. 3.4.

Relative Merits. Inadequate in-plane shear transfer capacity at an exterior shear wall typically is a deficiency when large openings along the line of the wall exist. In this case, the shear force to be resisted per unit length of wall may be significantly greater than the shear force per unit length transferred from the diaphragm by the existing nailing or bolting. If the diaphragm and the shear walls have adequate shear capacity (as described for interior shear walls in Sec. 3.7.1.2), the solution requires transfer of the diaphragm shear to a collector member for distribution to the discontinuous shear walls. For timber shear walls parallel to the joists, the exterior joist usually is doubled up at the exterior wall and extended as a header over openings. This doubled joist can be spliced for continuity and used as a drag strut with shear transfer to the wall by means of metal clip anchors and nails or lag screws. Figure 3.7.1.3 shows an elevation of an existing wood stud shear wall with a large opening. If the resulting unit shears in the walls on either side of the opening are larger than the existing shear transfer capacity of the roof diaphragm (e.g., in this case, the capacity is governed by the existing nailing to the perimeter blocking or double joists), a collector member is required to collect the diaphragm shears and transfer them, at a higher shear stress, to the shear walls. In Figure 3.7.1.3, it is assumed that additional capacity is required for the existing shear walls and provided by new sheathing on the inside face. The assumed force path is from the roof sheathing to the blocking or double joists, from the blocking or joists to the exterior sheathing, from the exterior sheathing to the double plates at the top of the stud wall, and from the double plates to the collector members and the new sheathing. Adequate new or existing nailing must be provided at each of the above interfaces. The shear walls also must be checked for shear transfer at the foundation and the need for hold-down provisions to resist uplift from the additional forces. Note that, in the detail parallel to the joists, the existing double joists, if adequately spliced, can be utilized as a collector member. Similarly, if the existing double plates had been continuous over the opening, the collector member normal to the joists would not be required.

For steel frame buildings with discontinuous braced panels, the spandrel supporting the floor or roof framing may be used as a chord or collector member.

For discontinuous masonry, concrete or precast concrete shear walls parallel to the joists, the sheathing typically is nailed to a joist or ledger bolted to the wall. The joist or ledger can be spliced for continuity and supplementary bolting to the shear wall provided as required. For shear walls perpendicular to the joists, the sheathing may be nailed to discontinuous blocking between the ends of the joists. In this case, the chord or collector member may have to be provided on top of the diaphragm. This new member may be a continuous steel member bolted to the wall and nailed or lag screwed, with proper edge distance, to the diaphragm and also could be designed to provide out-of-plane anchorage as indicated in Figure 3.7.1.2b.

As discussed above with respect to interior wall connection deficiencies, providing additional vertical-resisting elements (Technique 3) is likely to be the most costly alternative unless it is being considered to correct other component deficiencies.

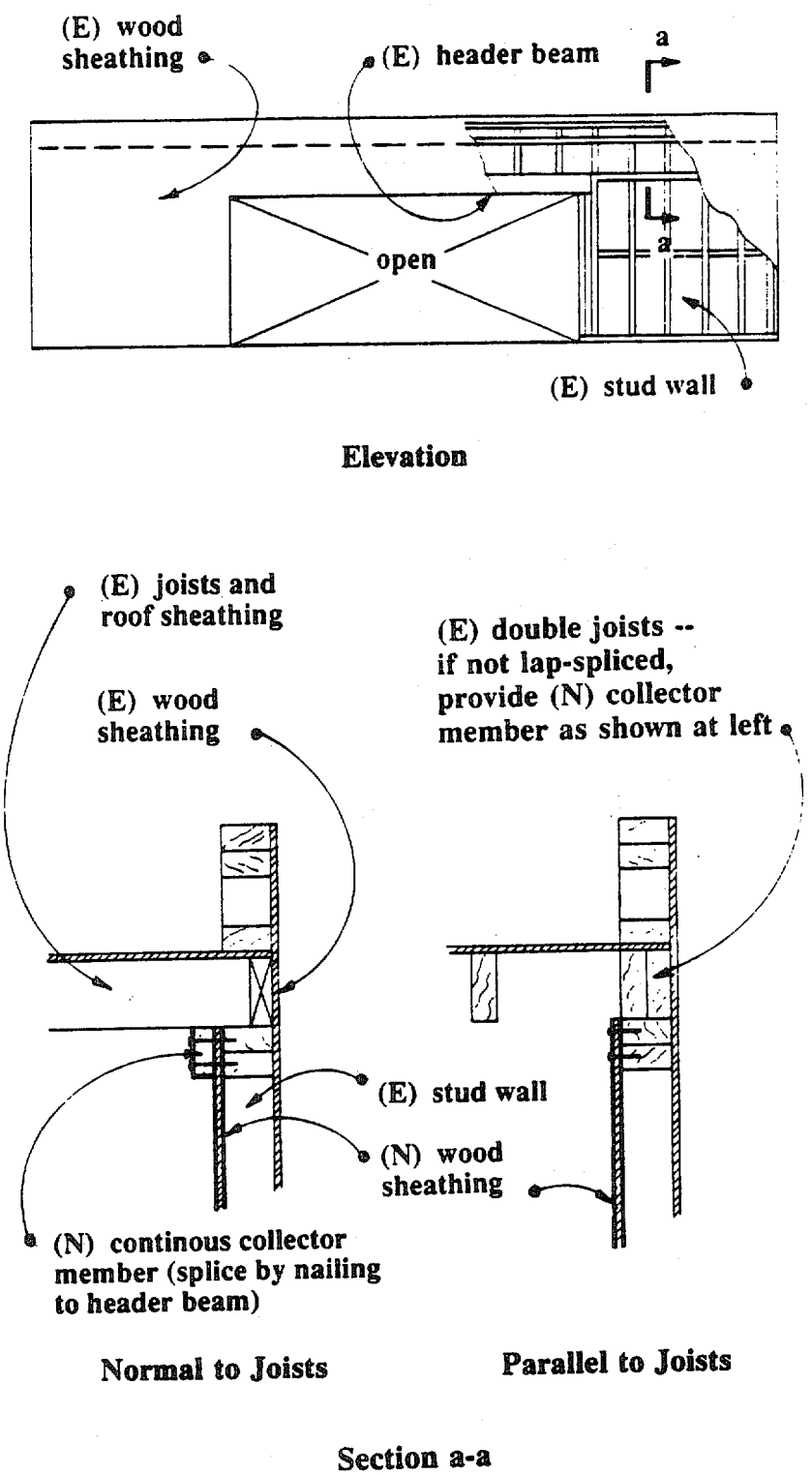

FIGURE 3.7.1.3 Strengthening an existing wood stud shear wall with a large opening.

3.7.1.4 Strengthening Techniques for Inadequate Out-of-Plane Anchorage

Techniques. Deficient out-of-plane anchorage capacity of wood diaphragms connected to concrete or masonry walls with wood ledgers can be improved by:

1. Increasing the capacity of the connection by providing steel straps connected to the wall (using drilled and grouted bolts or through bolts for masonry walls) and bolted or lagged to the diaphragm or roof or floor joists (Figures 3.7.1.4a, b, and c).

2. Increasing the capacity of the connections by providing a steel anchor to connect the roof or floor joists to the walls (Figure 3.7.1.4d).

3. Increasing the redundancy of the connection by providing continuity ties into the diaphragm (Figure 3.7.1.4a-d).

Relative Merits. An important condition to be addressed in retrofitting any existing heavy walled structure with a wood diaphragm is the anchorage of the walls for out-of-plane forces. Prior to the mid-1970s, it was common construction practice to bolt a 3x ledger to a concrete or masonry wall, install metal joist hangers to the ledger, drop in 2x joists, and sheath with plywood. The plywood that lapped the ledger would be nailed into the ledger providing both in-plane and out-of-plane shear transfer. The 1971 San Fernando earthquake caused many of these connections to fail. Out-of-plane forces stressed the ledgers in their weak cross-grain axis and caused many of them to split, allowing the walls to fall out and the roof to fall in. When retrofitting a masonry or concrete structure, this condition should be remedied by providing a positive connection between the concrete or masonry wall and wood diaphragm. Techniques 1 and 2 are, in general, equally cost-effective. In addition to correcting the ledger concerns, continuity ties need to be provided between diaphragm chords in order to distribute the anchorage forces well into the diaphragm. Joist hangers and glulam connections frequently have no tensile capacity, but this tensile capacity can be provided by installing tie rods bolted to adjacent joist or glulam framing (Figure 3.7.1.4e). These continuity ties provide a necessary redundancy in the connection of heavy walled structures to timber diaphragms.

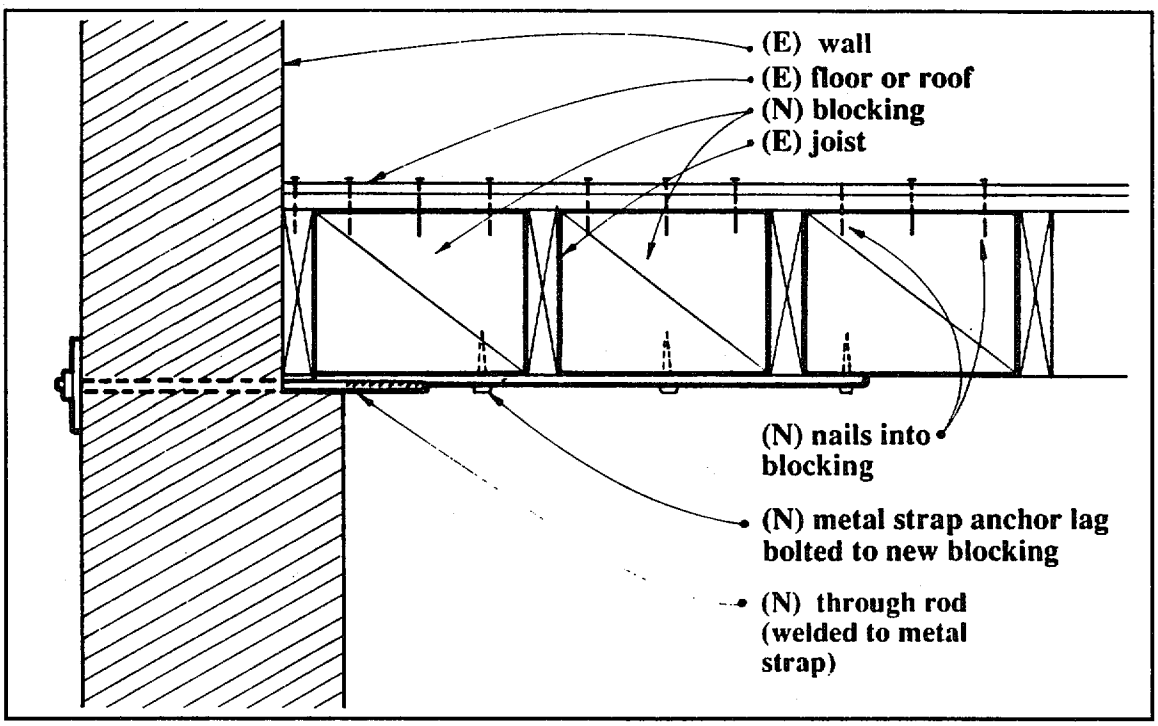

FIGURE 3.7.1.4a Strengthening out-of-plane connections of a wood diaphragm.

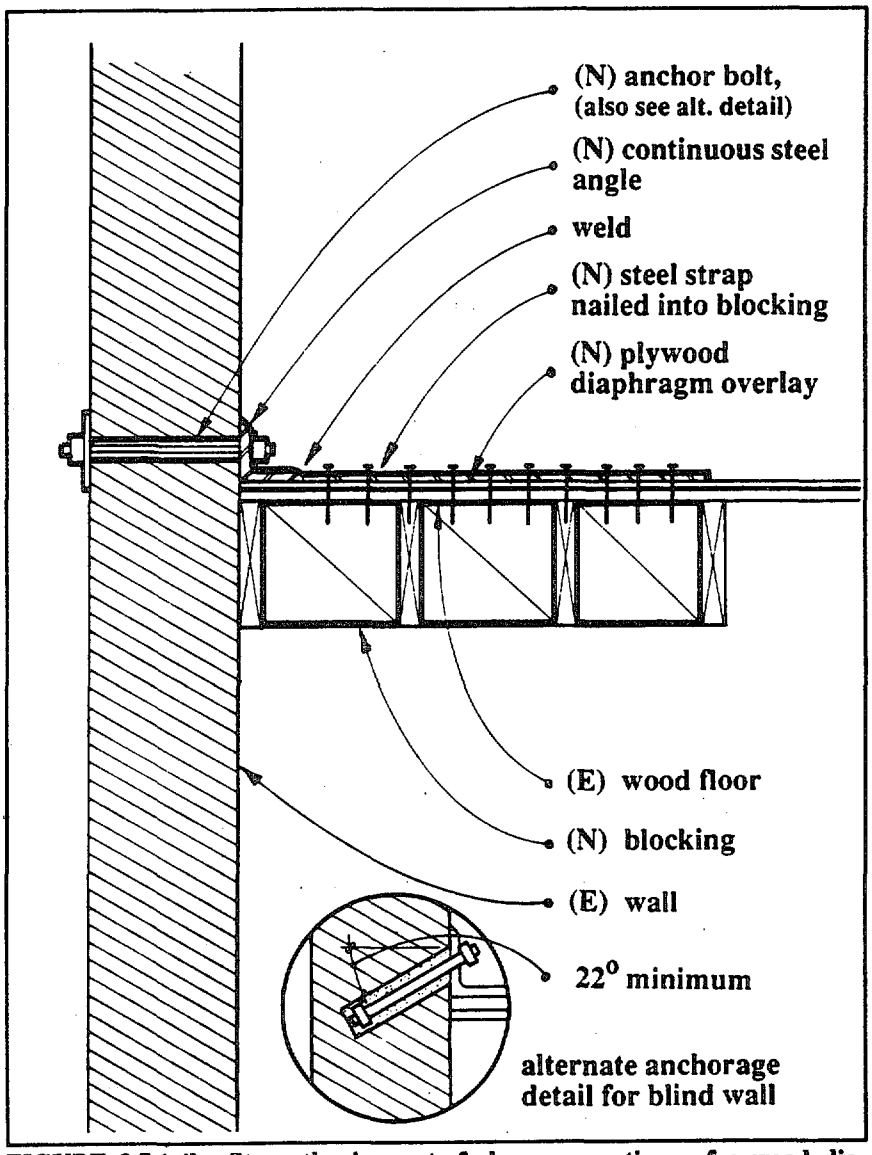

FIGURE 3.7.1.4b Strengthening out-of-plane connections of a wood diaphragm.

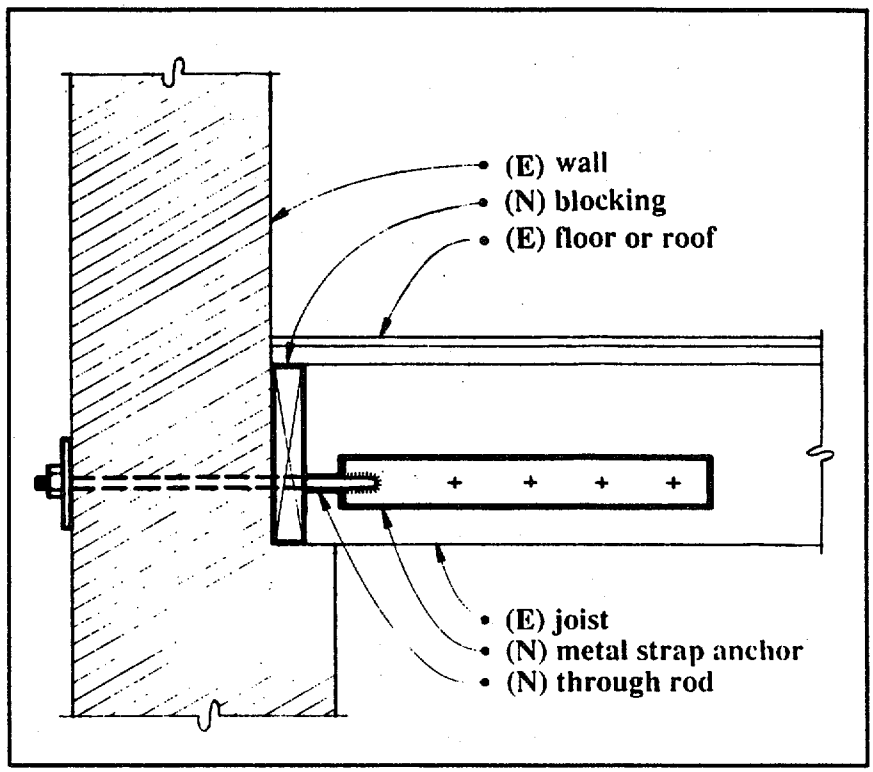

FIGURE 3.7.1.4c Strengthening out-of-plane connections of a wood diaphragm.

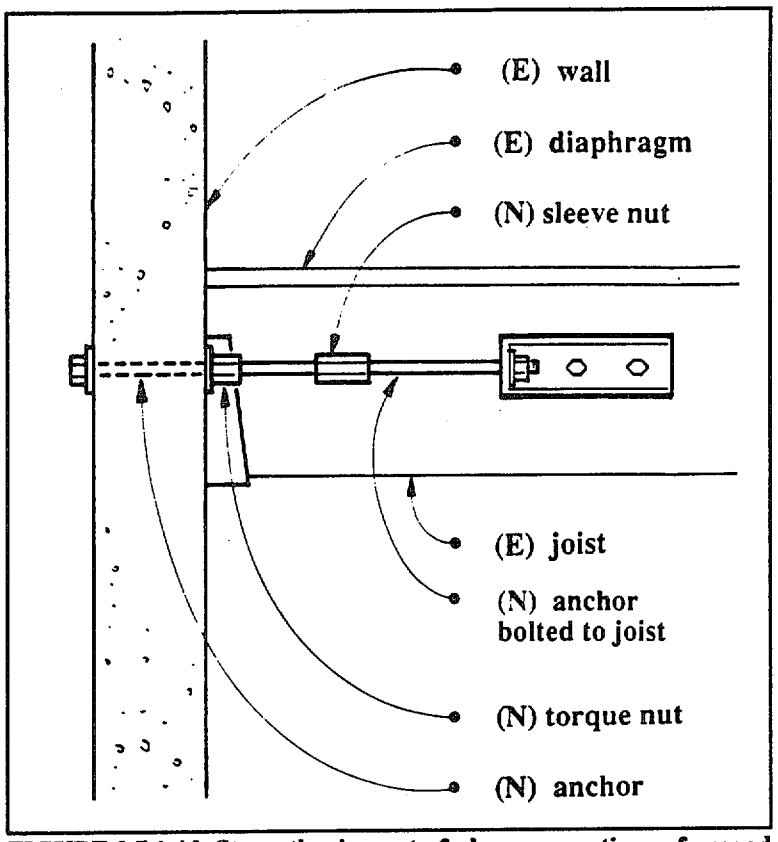

FIGURE 3.7.1.4d Strengthening out-of-plane connections of a wood diaphragm.

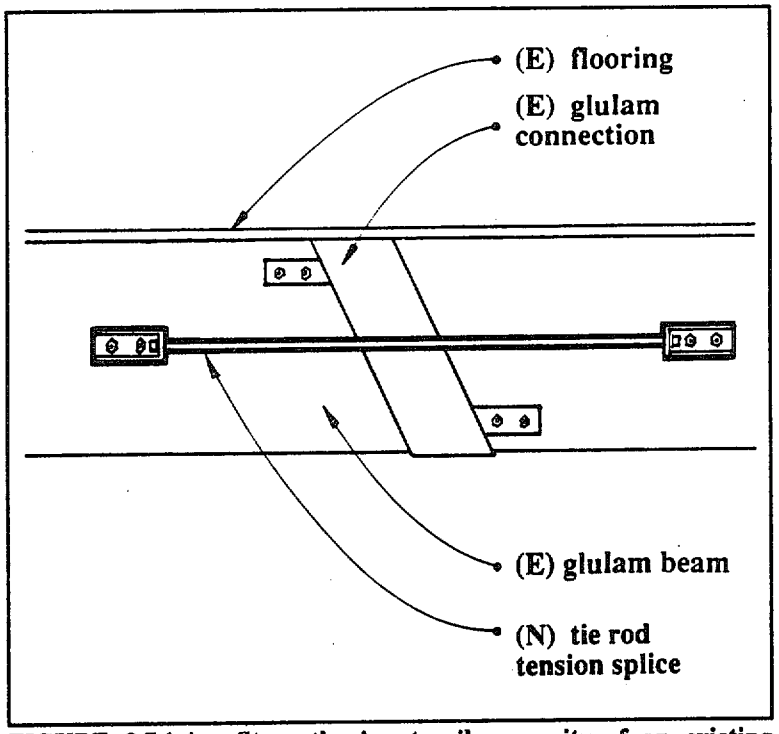

FIGURE 3.7.1.4e Strengthening tensile capacity of an existing glulam beam connection.

3.7.1.5 Strengthening Techniques for Interfloor Tensile Capacity

Techniques. Deficient tensile capacity of the connections of wood stud shear walls through diaphragms can be improved by:

1. Increasing the tensile capacity of the connections at the edge of the shear walls by providing metal connectors.

2. Reducing the overturning moments by providing supplemental vertical-resisting elements as discussed in Sec. 3.4.

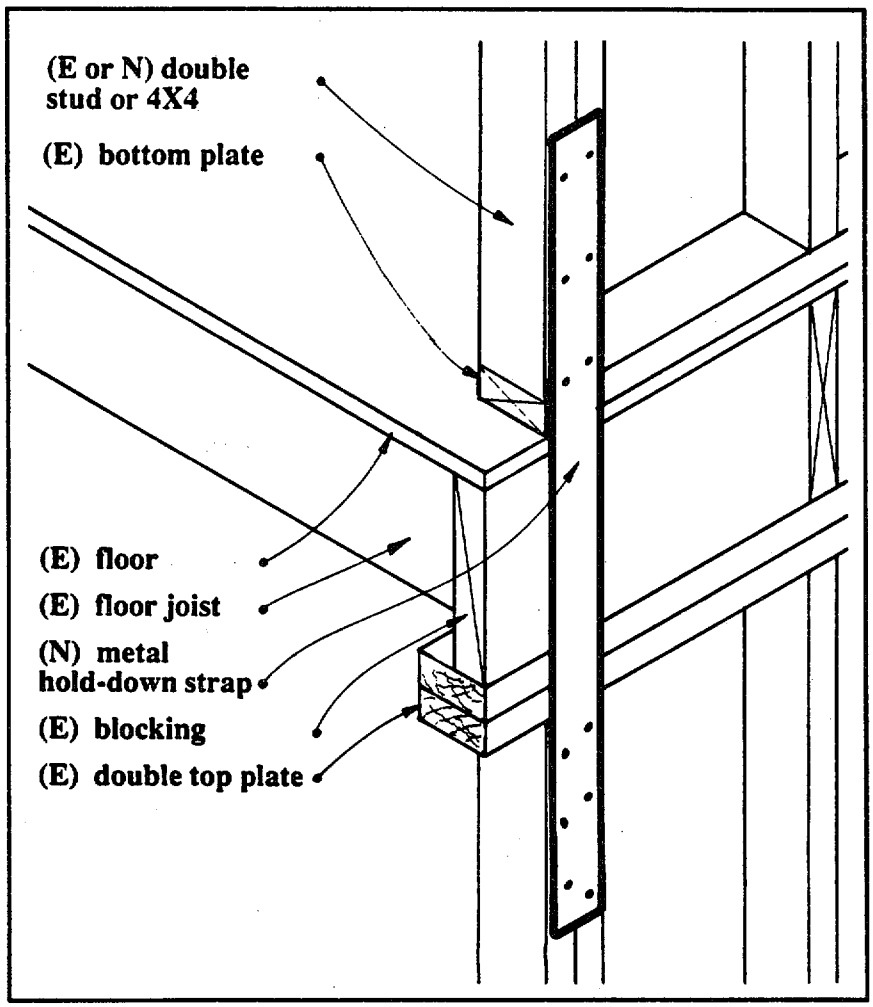

FIGURE 3.7.1.5a Strengthening the connection between shear walls using a metal strap.

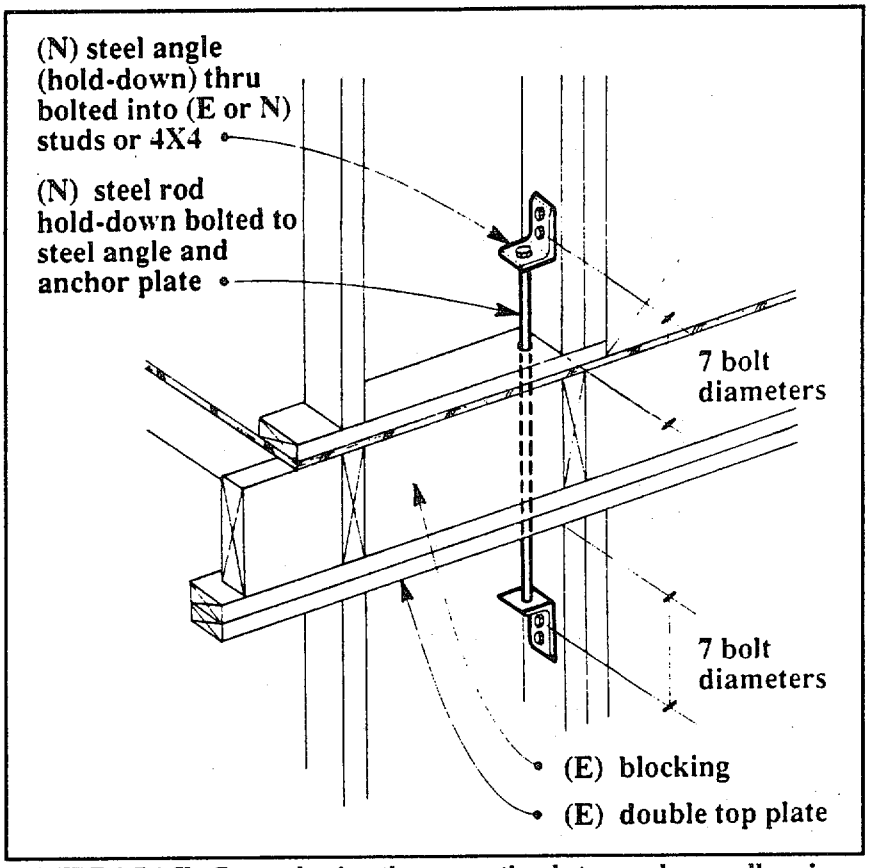

FIGURE 3.7.1.5b Strengthening the connection between shear walls using a hold-down.

Relative Merits. Typical wood stud framing has minimal capacity to transfer uplift forces from one shear wall to the shear wall below. At exterior walls, plywood sheathing generally is provided with a horizontal joint below the diaphragm to provide for "settling" shrinkage of the framing. Hence, minimal resistance to transfer uplift forces is provided unless continuity in the sheathing is provided by nailing top and bottom pieces to a common member (e.g., horizontal blocking or fascia as shown in Figure 3.5.1.3). The only resistance to uplift loads at exterior or interior shear walls may be the withdrawal capacity of the nails.

Metal straps or tie rods that tie the shear wall edge framing between floors (Figure 3.7.1.5c) are an economical approach to providing the prescribed tensile capacity. The wall finishes would be removed, a hole drilled or cut in the diaphragm or wall plates, and the connectors installed. Plywood shear walls should be adequately edge nailed to the double studs that are connected with the metal straps. For light timber structures, the metal straps may be of sheet metal and the sheathing can be nailed through the straps. When the straps are required to be of greater thickness, they may be recessed and drilled for nailing of the sheathing or, alternatively, the straps may be placed on the outside of the sheathing. See Figure 3.5.1.3 for typical splicing of sheathing and development of double top plates as chord or collector members. Figures 3.7.1.5a and b present two connection details where the shear wall on the upper floor does not align with the shear wall on a lower floor.

Technique 2 would be a viable alternative only if it is being considered to correct other component deficiencies (e.g., inadequate shear capacity in the existing walls).

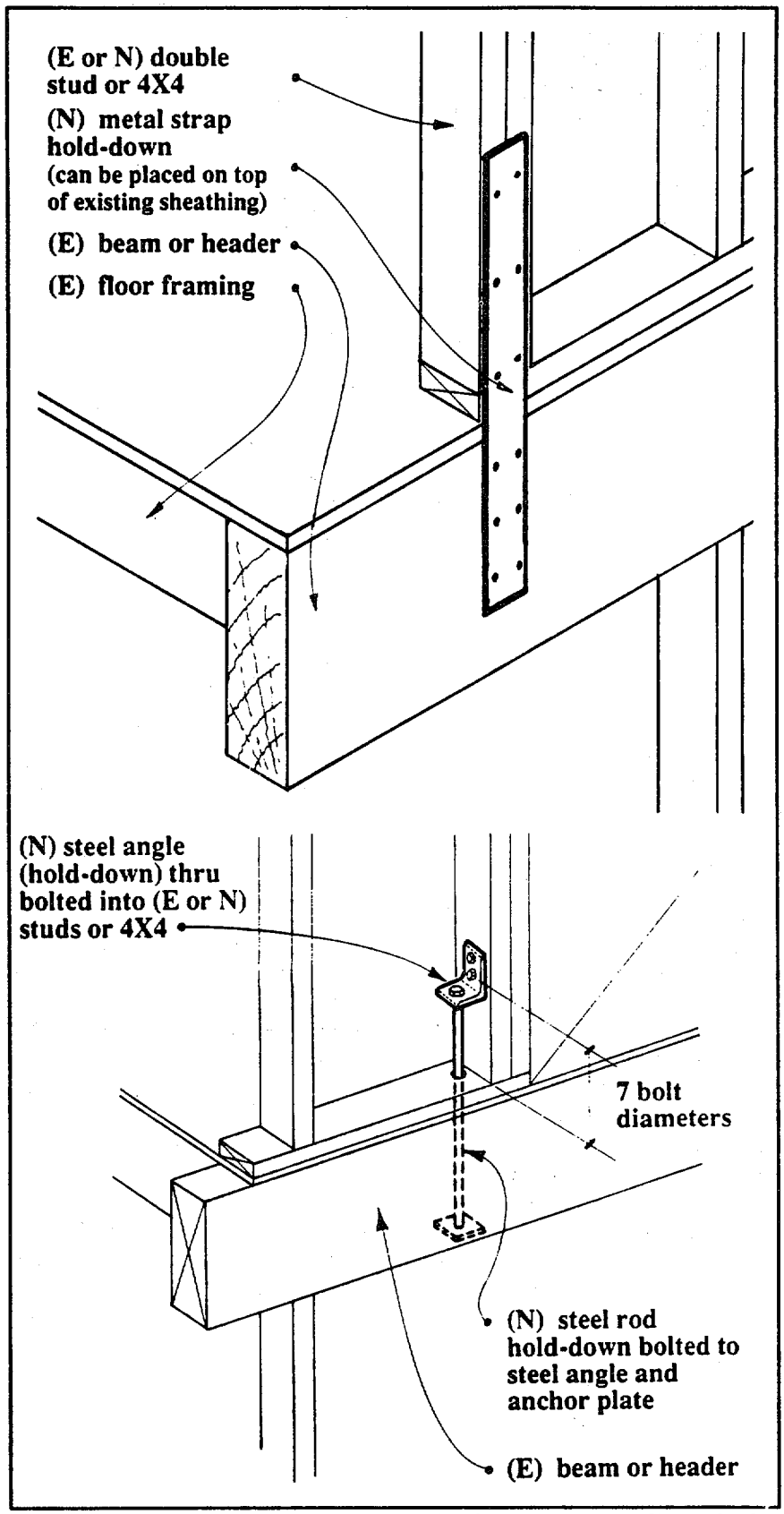

FIGURE 3.7.1.5c Strengthening shear wall uplift capacity at a discontinuity.

3.7.2 CONNECTIONS OF CONCRETE DIAPHRAGMS

3.7.2.1 Deficiencies

The principal deficiencies of the connections of concrete diaphragms to vertical-resisting elements such as shear walls or braced frames are:

- Inadequate in-plane shear transfer capacity and
- Inadequate anchorage capacity for out-of-plane forces in the connecting walls.

3.7.2.2 Strengthening Techniques for In-Plane Shear Wall Connections

Techniques. Deficient in-plane shear transfer capacity of a diaphragm to an interior shear wall or braced frame can be improved by:

1. Reducing the local stresses at the diaphragm-to-wall interface by providing collector members or drag struts under the diaphragm and connecting them to the diaphragm and the wall.
2. Increasing the capacity of the existing diaphragm-to-wall connection by providing additional dowels grouted into drilled holes.
3. Reducing the shear stresses in the existing connection by providing supplemental vertical-resisting elements as discussed in Sec. 3.4.

Relative Merits. Inadequate in-plane shear capacity of connections between concrete diaphragms and vertical-resisting elements usually occurs where large openings in the diaphragm exist adjacent to the shear wall (e.g., at stair wells) or where the shear force distributed to interior shear walls or braced frames exceeds the capacity of the connection to the diaphragm. If the walls and the diaphragm have sufficient capacity to resist the prescribed loads, the most cost-effective alternative to increase the connection capacity is likely to be providing additional dowels grouted into drilled holes (Technique 2). If the required connection capacity cannot be developed within the length of the shear wall, the addition of collector members (Technique 1) as indicated in Figure 3.7.2.2 is likely to be the most cost-effective alternative.

As previously discussed, reducing the forces in the deficient connection by providing supplemental vertical-resisting elements (Technique 3) is not likely to be the most cost-effective alternative (due to the probable need for new foundations and drag struts) unless it is being considered to correct other component deficiencies.

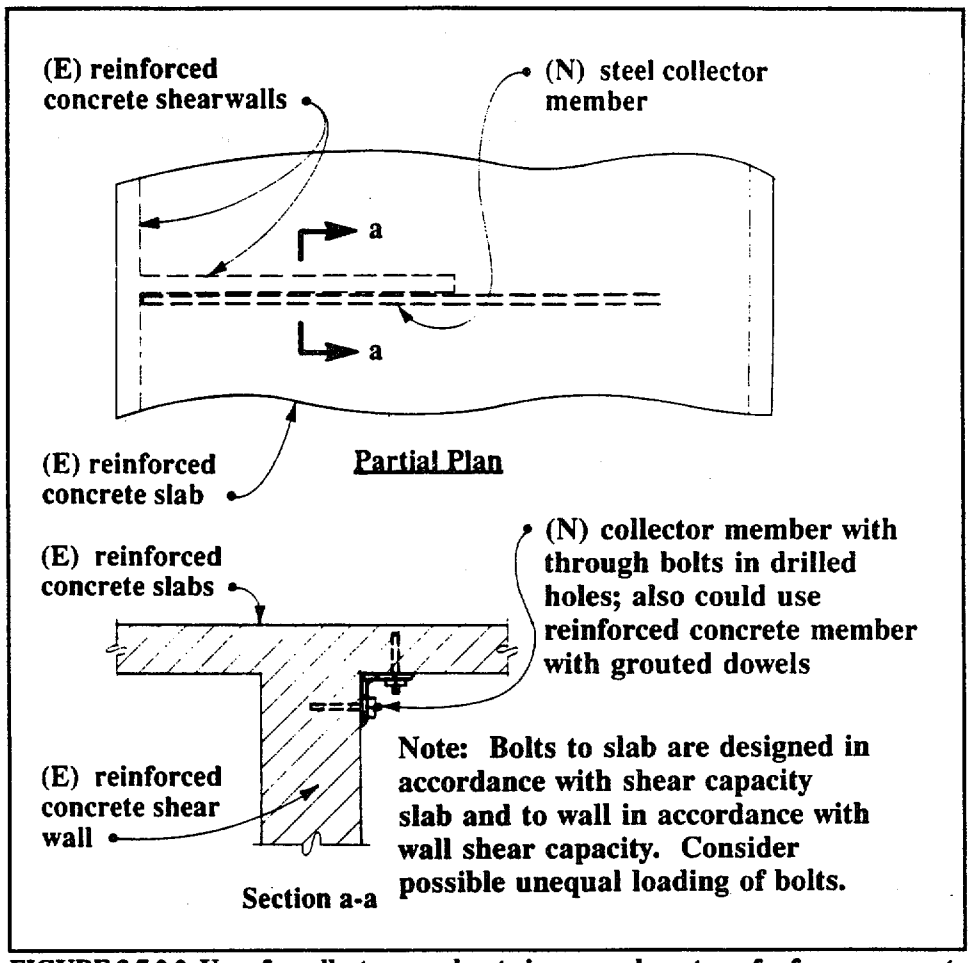

FIGURE 3.7.2.2 Use of a collector member to improve shear transfer from a concrete diaphragm.

3.7.2.3 Strengthening Techniques for Out-of-Plane Capacity

Techniques. Deficient out-of-plane anchorage capacity of connections of concrete diaphragms to concrete or masonry walls can be improved using one or both of the following techniques:

1. Increasing the capacity of the connection by providing additional dowels grouted into drilled holes.

2. Increasing the capacity of the connection by providing a new member above or below the slab connected to the slab with drilled and grouted bolts similar to that indicated in Figure 3.5.4.3 for providing a new diaphragm chord.

Relative Merits. The most cost-effective alternative generally is to provide additional dowels grouted into drilled holes (Technique 1). The holes are most efficiently drilled from the exterior through the wall and into the slab. Access to the exterior face of the wall is obviously required. When the exterior face is not accessible (e.g., when it abuts an adjacent building), providing a new member connected to the existing wall and slab (Technique 2) is likely to be preferred.

3.7.3 CONNECTIONS OF POURED GYPSUM DIAPHRAGMS

3.7.3.1 Deficiencies

The principal deficiencies of poured gypsum diaphragms are similar to those for concrete diaphragms:

- Inadequate in-plane shear transfer capacity and
- Inadequate anchorage capacity for out-of-plane forces in the connecting walls.

3.7.3.2 Strengthening Techniques

Techniques. If the gypsum diaphragm is in direct contact with the shear wall, it will be possible to improve the in-plane shear transfer by providing new dowels from the diaphragm into the shear wall similar to the details indicated in Figures 3.5.2.2 and 3.5.2.3. Alternative strengthening techniques for the deficiencies also include removal of the gypsum diaphragm and replacement with steel decking or the addition of a new horizontal bracing system designed to resist all of the seismic forces.

Relative Merits. As indicated in Sec. 3.5.3.2, allowable structural stresses for gypsum are very low and the additional strengthening that can be achieved is very limited. Further, the typical framing details (e.g., steel joist, bulb tee, and insulation board) are such that it is difficult to make direct and effective connections to the gypsum slab. For these reasons, the techniques involving removal and replacement or a new horizontal bracing system are likely to be the most cost-effective solutions except when the existing diaphragm is only marginally deficient.

3.7.4 CONNECTIONS OF PRECAST CONCRETE DIAPHRAGMS

3.7.4.1 Deficiencies

The principal deficiencies of the connections of precast concrete diaphragms to the vertical-resisting elements are:

- Inadequate in-plane shear transfer capacity and
- Inadequate anchorage capacity at the exterior walls for out-of-plane forces.

3.7.4.2 Strengthening Techniques for Precast Concrete Diaphragm Connections

Techniques. Deficient shear transfer or anchorage capacity of a connection of a precast concrete diaphragm to a concrete or masonry wall or a steel frame can be improved by:

1. Increasing the capacity of the connection by providing additional welded inserts or dowels placed in drilled or grouted holes.
2. Increasing the capacity of the connection by providing a reinforced concrete overlay that is bonded to the precast units and anchored to the wall with additional dowels placed in drilled and grouted holes (Figure 3.5.2.2).
3. Reducing the forces at the connection by providing supplemental vertical-resisting elements as discussed in Sec. 3.4.

Relative Merits. Precast concrete plank or tee floors that have inadequate connection capacity for transferring in-plane shear to vertical elements such as shear walls or braced frames can be strengthened by drilling intermittent holes in the precast units at the vertical element. When the floors are supported on steel framing, welded inserts (or studs) can be added and the holes grouted (Technique 1). When the floors are supported on concrete or masonry units, dowels can be inserted and grouted into the drilled holes. If the diaphragm contains prestressing strands, extreme care must be taken prior to drilling to avoid cutting the strands. A more costly alternative is to provide a reinforced concrete overlay that is bonded to the precast units and additional dowels grouted into holes drilled into the wall (Technique 2). This will require the stripping of the existing floor surface and raising the floor level by 2 to 3 inches, which will necessitate adjusting of nonstructural elements to the new floor elevation (e.g., stairs, doors, electrical outlets, etc.).

As previously discussed, reducing the shear forces in the deficient connection by providing supplemental vertical-resisting elements (Technique 3) is not likely to be the most cost-effective alternative (due to the probable need of new foundations and drag struts) unless it is being considered to correct other component deficiencies. This alternative also is not effective in reducing the out-of-plane forces unless the new vertical-resisting elements can be constructed so as to form effective buttresses for the existing walls.

3.7.5 CONNECTIONS OF STEEL DECK DIAPHRAGMS WITHOUT CONCRETE FILL

3.7.5.1 Deficiencies

For steel deck diaphragms without concrete fill, the principal deficiencies of their connections to the vertical-resisting elements such as shear walls, braced frames, or moment frames are:

- Inadequate in-plane shear capacity and
- Inadequate anchorage capacity for out-of-plane forces in walls.

3.7.5.2 Strengthening Techniques for Steel Deck Connections

Techniques. Deficient shear transfer or anchorage capacity of a connection of a steel deck diaphragm to a shear wall, braced frame, or moment frame can be improved by:

1. Increasing the capacity of the connection by providing additional welding at the vertical element.
2. Increasing the capacity of the connection by providing additional anchor bolts.
3. Increasing the capacity of the connection by providing concrete fill over the deck with dowels grouted into holes drilled into the wall.
4. Increasing the capacity of the connection by providing new steel members (Figure 3.7.5.2a) to effect a direct transfer of diaphragm shears to a shear wall.
5. Reducing the local stresses by providing additional vertical-resisting elements such as shear walls, braced frames, or moment frames as discussed in Sec. 3.4.

Relative Merits. Steel decking typically is supported by metal framing, by steel angle, or by channel ledgers bolted to concrete or masonry walls. If the deficiency is in the connection and not the diaphragm, the most cost-effective alternative is to increase the welding of the decking to the steel member or ledger to at least the capacity of the diaphragm. If supported by a ledger, the capacity of the ledger connections to the concrete or masonry wall also may have to be improved; this is most effectively done by providing additional bolts in drilled and grouted holes.

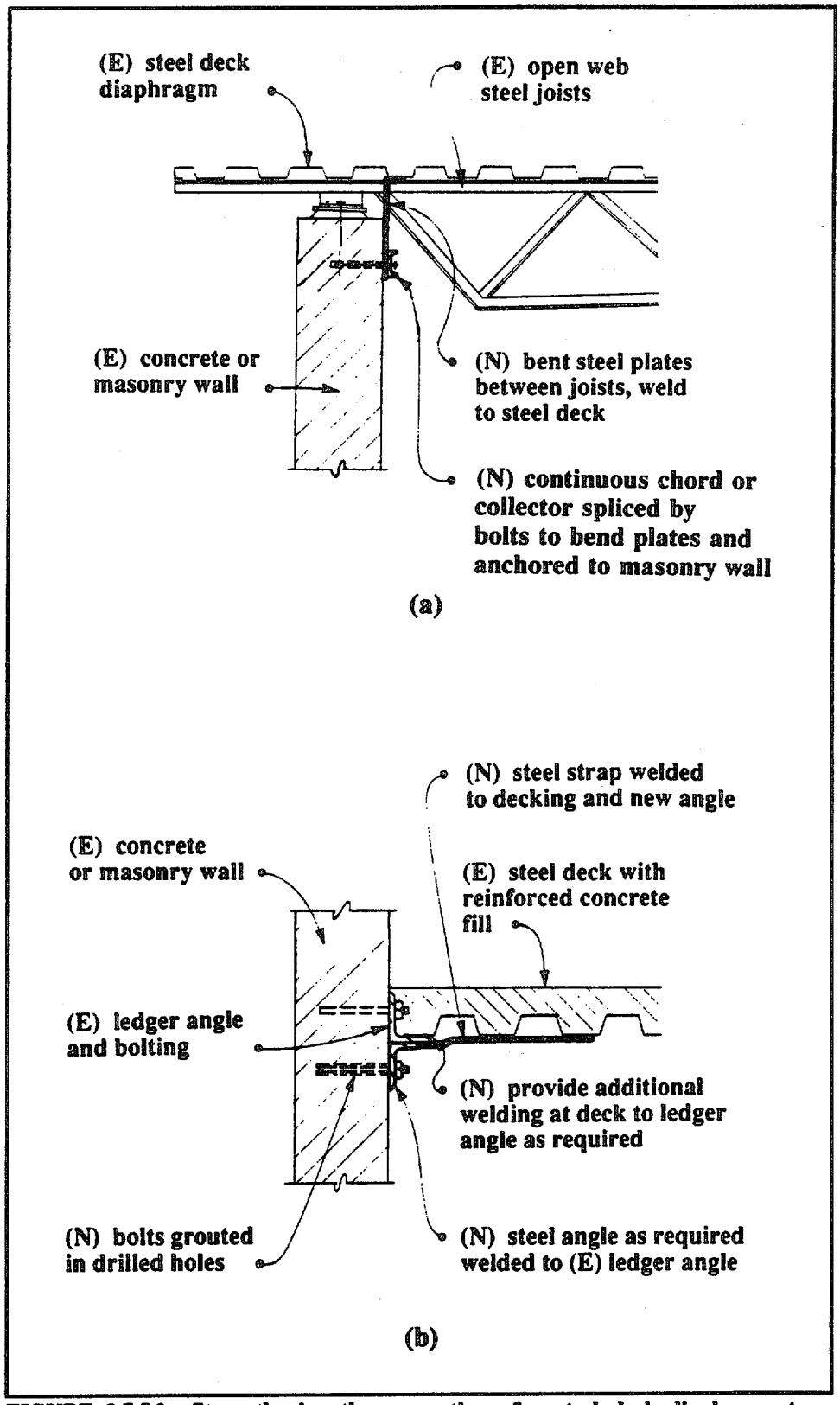

FIGURE 3.7.5.2 Strengthening the connection of a steel deck diaphragm to a concrete or masonry wall.

If the decking is being reinforced by filling with reinforced concrete, the most effective alternative will be to drill and grout dowels into the adjacent concrete or masonry wall and lap with reinforcing steel in the new slab. In some cases it may be feasible to use the existing steel support member at the wall as a collector as shown in Figure 3.7.5.2b. In this figure the capacity of the existing decking has been increased by additional welding to the ledger angle and the addition of a reinforced concrete fill. Reinforcement dowels are welded to the angle that functions as a collector member and the shear forces are transferred to the wall by the existing and new anchor bolts, as required.

Steel deck roof diaphragms may be supported on open web steel joists that rest on steel bearing plates at the top of concrete or masonry walls. In existing buildings that have not been properly designed for resisting lateral loads, there may not be a direct path for the transfer of diaphragm shears to the vertical walls, particularly when the decking span is parallel to the wall. As shown in Figure 3.7.5.2a, new steel elements (i.e., bent plates) can be provided between the joists for direct connection to the decking. A continuous member also can be provided to function as a chord or collector member. As noted above, strengthening a steel deck diaphragm connection to the vertical-resisting elements is effective only if the body of the diaphragm has adequate capacity to resist the design lateral forces. If the diaphragm does not have adequate capacity it needs to be strengthened as discussed in Sec. 3.5.5.

As previously discussed, reducing the shear transfer forces in the deficient connection by providing supplemental vertical-resisting elements (Technique 4) is not likely to be the most cost-effective alternative (due to the probable need of new foundations and drag struts) unless it is being considered to correct other component deficiencies. Further, in order to reduce out-of-plane wall forces, the new vertical elements would be required to act as buttresses to the existing walls.

3.7.6 CONNECTIONS OF STEEL DECK DIAPHRAGMS WITH CONCRETE FILL

3.7.6.1 Deficiency

The principal deficiency of a connection of a steel deck diaphragm with concrete fill to the vertical-resisting elements such as shear walls, braced frames, or moment frames is the in-plane shear capacity or anchorage capacity for out-of-plane forces in walls.

3.7.6.2 Strengthening Techniques for Steel Deck Connections

Techniques. Deficient shear capacity or anchorage of a connection of a steel deck diaphragm to a shear wall, braced frame, or moment frame can be improved by:

1. Increasing the shear capacity by drilling holes through the concrete fill, and providing additional shear studs welded to the vertical elements through the decking (Figure 3.5.5.2a).

2. Increasing the capacity of the connection by providing additional anchor bolts (drilled and grouted) connecting the steel support to the wall.

3. Increasing the capacity of the connection by placing dowels between the existing wall and diaphragm slab.

4. Reducing the local stresses by providing additional vertical-resisting elements such as shear walls, braced frames, or moment frames as discussed in Sec. 3.4.

Relative Merits. If the deficiency is in both the connection of the diaphragm to the ledger and the ledger to the shear wall, the most cost-effective alternative may be to provide a direct force transfer from the slab to the wall by installing dowels (Technique 3). This is accomplished by removing the concrete to expose the diaphragm slab reinforcement, drilling holes in the wall, laying in dowels, and grouting and reconstructing the diaphragm slab. If the deficiency is in the slab-to-supporting steel member connection, Technique 1 is preferred. If the deficiency is in the steel ledger to the wall connection, Technique 2 is preferred. Figure 3.7.5.2b illustrates a technique for

strengthening a steel deck diaphragm connection to a concrete or masonry wall. In this figure, it is assumed that the existing decking with concrete fill has adequate capacity for the design loads, but the connection to the wall is deficient for in-plane shear and out-of-plane anchorage forces. In the figure, the in-plane shear is assumed to be transferred from the decking to the existing ledger angle with additional welding (if required). The new angles, bolted to the wall and welded to the ledger angle, provide the necessary additional shear transfer capacity. The new steel straps, welded to the new angles and to the underside of the decking, provide the additional out-of-plane anchorage capacity. When the new dowels or anchor bolts are to be attached to existing thin concrete walls (e.g., precast tees or other thin ribbed concrete sections), through bolts or threaded rods are required to provide adequate anchorage or doweling to the diaphragm. If the vertical-resisting elements are steel braced frames or steel moment frames, the increase in connection capacity obviously would be achieved through additional welding and supplemental reinforcing members as required.

As previously discussed, reducing the forces in the deficient connection by providing supplemental vertical-resisting elements (Technique 4) is unlikely to be the most cost-effective alternative (due to the probable need of new foundations and drag struts) unless it is being considered to correct other component deficiencies. Further, in order to reduce out-of-plane wall forces, the new vertical elements would be required to act as buttresses to the existing walls.

3.7.7 CONNECTIONS OF HORIZONTAL STEEL BRACING

3.7.7.1 Deficiencies

The two primary deficiencies in the connection capacity of horizontal steel braces to vertical-resisting elements such as shear walls or braced frames are:

- Inadequate in-plane shear transfer capacity and
- Inadequate anchorage capacity when supporting concrete or masonry walls for out-of-plane forces.

3.7.7.2 Strengthening Techniques for In-Plane Shear Transfer Capacity

Techniques. Deficient shear transfer capacity of connections of horizontal steel bracing systems to shear walls or braced frames can be improved by:

1. Increasing the capacity by providing larger or more bolts or by welding.
2. Reducing the stresses by providing supplemental vertical-resisting elements such as shear walls or braced frames as discussed in Sec. 3.4.

Relative Merits. The first alternative of providing larger or more bolts between the horizontal brace members and the concrete or masonry shear wall or providing additional welding when connecting to a steel braced frame generally will be the most cost-effective. Collectors along the wall may be required to distribute the concentrated brace shear along the wall to allow for adequate bolt spacing.

As previously discussed, reducing the forces in the deficient connection by providing supplemental vertical-resisting elements (Technique 2) is not likely to be the most cost-effective alternative unless it is being considered to correct other component deficiencies.

3.7.7.3 Strengthening Technique for Out-Of-Plane Anchorage

Technique. Deficient out-of-plane anchorage capacity of connections between horizontal steel bracing systems and concrete or masonry shear walls can be improved by increasing the capacity of the connection by providing additional anchor bolts grouted in drilled holes and by providing more bolts or welding to the bracing members.

3.8 VERTICAL ELEMENT TO FOUNDATION CONNECTIONS

Seismic inertial forces originate in all elements of buildings and are delivered through structural connections to horizontal diaphragms. The diaphragms distribute these forces to vertical elements that transfer the forces to the foundation and the foundation transfers the forces into the ground.

An adequate connection between the vertical elements and the foundation is essential to the satisfactory performance of a strengthened structure. The connections must be capable of transferring the in-plane lateral inertia forces from the vertical elements to the foundations and of providing adequate capacity for resisting uplift forces caused by overturning moments.

3.8.1 CONNECTIONS OF WOOD STUD SHEAR WALLS

3.8.1.1 Deficiencies

The principal deficiencies in the connection of wood stud shear walls to their foundations are:

- Inadequate shear capacity of the anchorage,
- Inadequate shear capacity of cripple stud walls, and
- Inadequate uplift capacity.

3.8.1.2 Strengthening Techniques for Inadequate Anchorage Shear Capacity

Techniques. Deficient shear capacity of the connection of a wood stud wall to its foundation can be improved using one or both of the following alternatives:

1. Increasing the shear capacity by providing new or additional anchor bolts between the sill plate and the foundation (Figure 3.8.1.2a).
2. Increasing the shear capacity by providing steel angles or plates with anchor bolts connecting them to the foundation and bolts or lag screws connecting them to the sill plate or wall (Figure 3.8.1.2b).

Relative Merits. Lack of adequate anchorage of the walls to the foundation can cause poor seismic performance of wood frame structures. Although most older wood frame structures were not designed for seismic loads, they have performed extremely well in past earthquakes provided they were bolted to their foundation. This good performance may be attributed to their light weight, ductile connections, and redundant load paths provided they are bolted to the foundations.

If the walls are not bolted to the foundation it is relatively simple to provide adequate anchorage. Providing bolts through the sill plates in the foundation (Technique 1) is typically the best approach. If a crawl space exists, the bolts can be installed easily at regular intervals. If the walls sit directly on the foundation without floor joists (e.g., a slab on grade), access through the wall covering (e.g., gypsum board) is required and the wall surface subsequently must be patched. If the crawl space is not deep enough for vertical holes to be drilled through the sill plate, the addition of connection plates or angles (Technique 2) may be a more viable alternative.

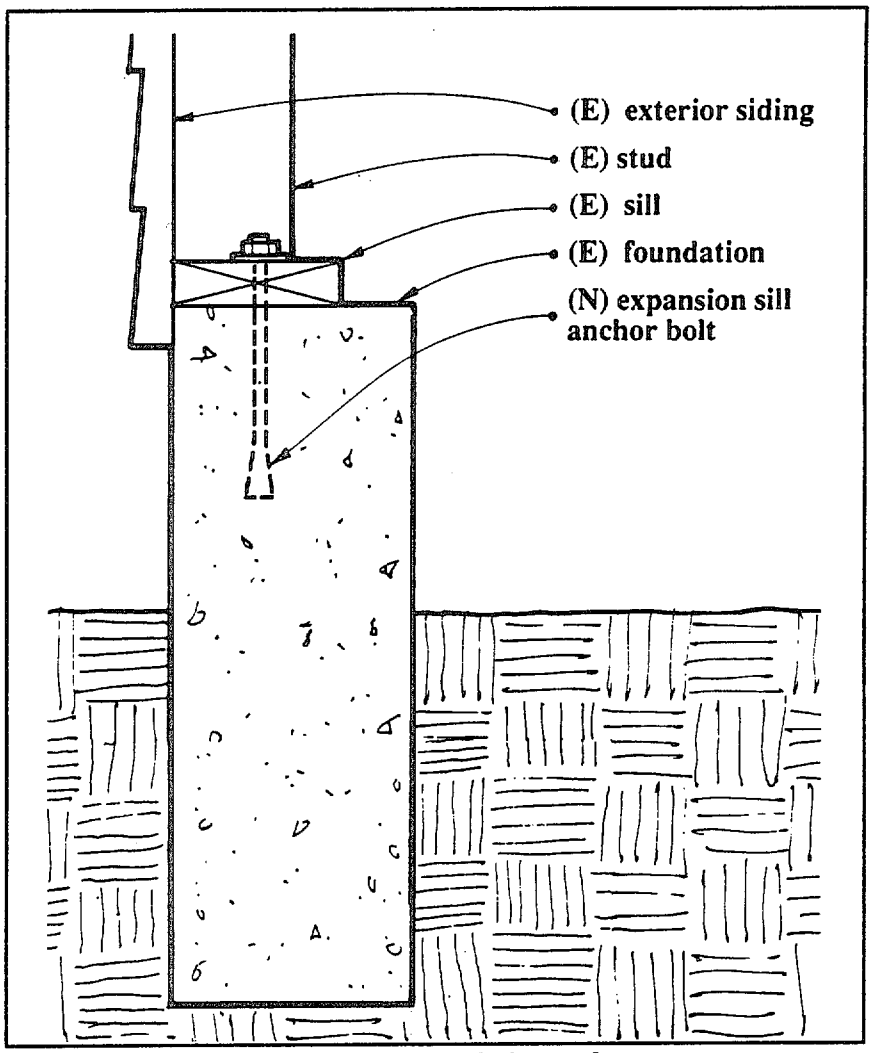

FIGURE 3.8.1.2a Providing wall to foundation anchors.

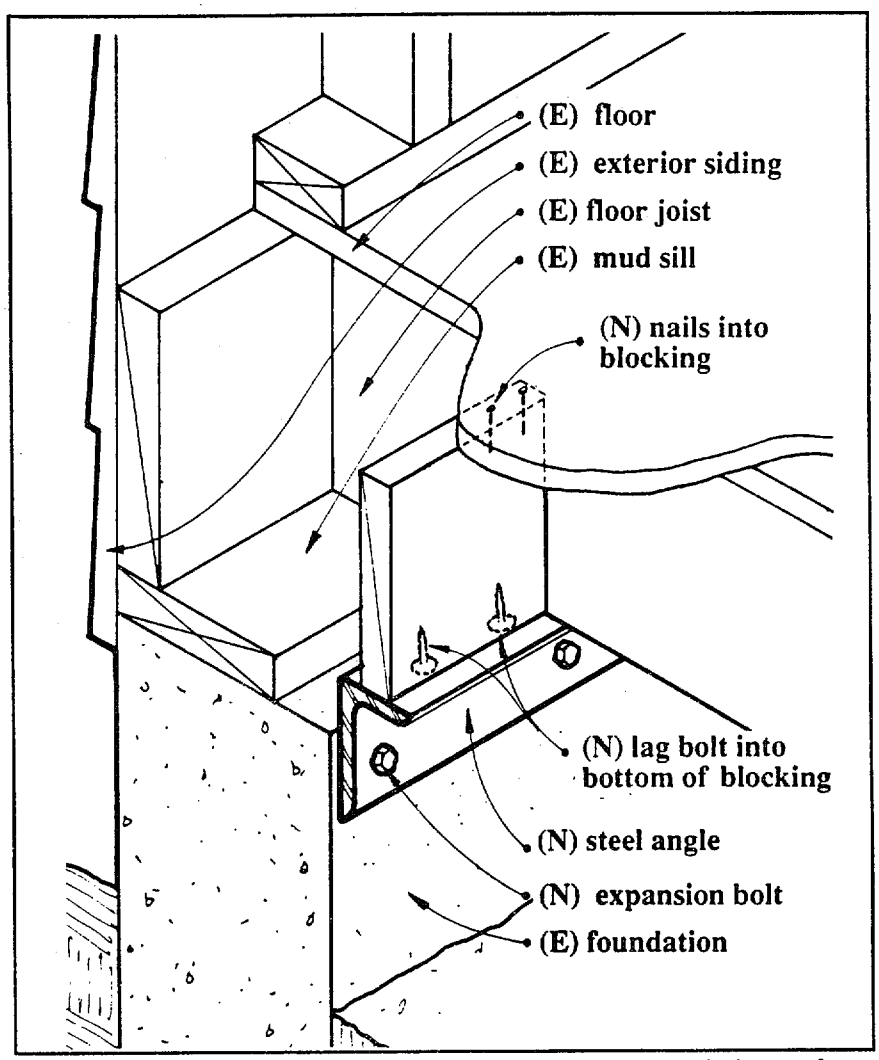

FIGURE 3.8.1.2b Alternate detail for providing wall to foundation anchors.

3.8.1.3 Strengthening Techniques for Cripple Stud Walls

Techniques. Weak cripple stud walls also are a significant reason for damage to wood frame structures. Cripple stud perimeter walls are a frequent construction technique used to support the first floor of a wood structure a short distance above the ground on sloping sites or to provide a crawl space under the floor framing. The exterior face may be finished with wood or metal siding or plaster while the studs on the inside usually remain exposed.

Strengthening of the cripple stud walls is relatively simple. Plywood sheathing is nailed to the cripple studs (usually on the inside). The top edge of the plywood is nailed into the floor framing and the bottom edge is nailed into the sill plate (Figure 3.8.1.3). The sill plate also must be anchored to the foundation.

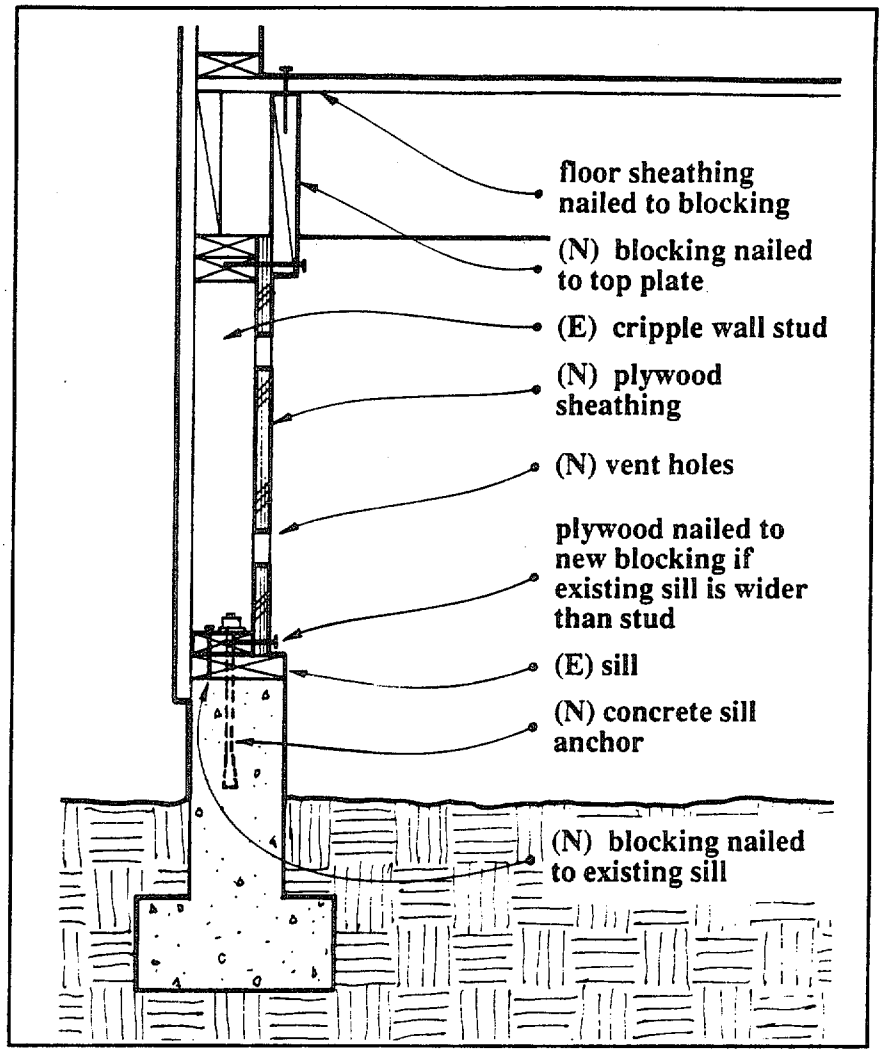

FIGURE 3.8.1.3 Strengthening a cripple stud wall.

3.8.1.4 Strengthening Techniques for Uplift Capacity

Deficient uplift capacity of the connections of wood shear walls to their foundations can be improved by:

1. Increasing the capacity by providing steel hold-downs bolted to the wall and anchored to the concrete (Figure 3.8.1.4).

2. Reducing the uplift requirement by providing supplemental shear walls (as discussed in Sec. 3.4.).

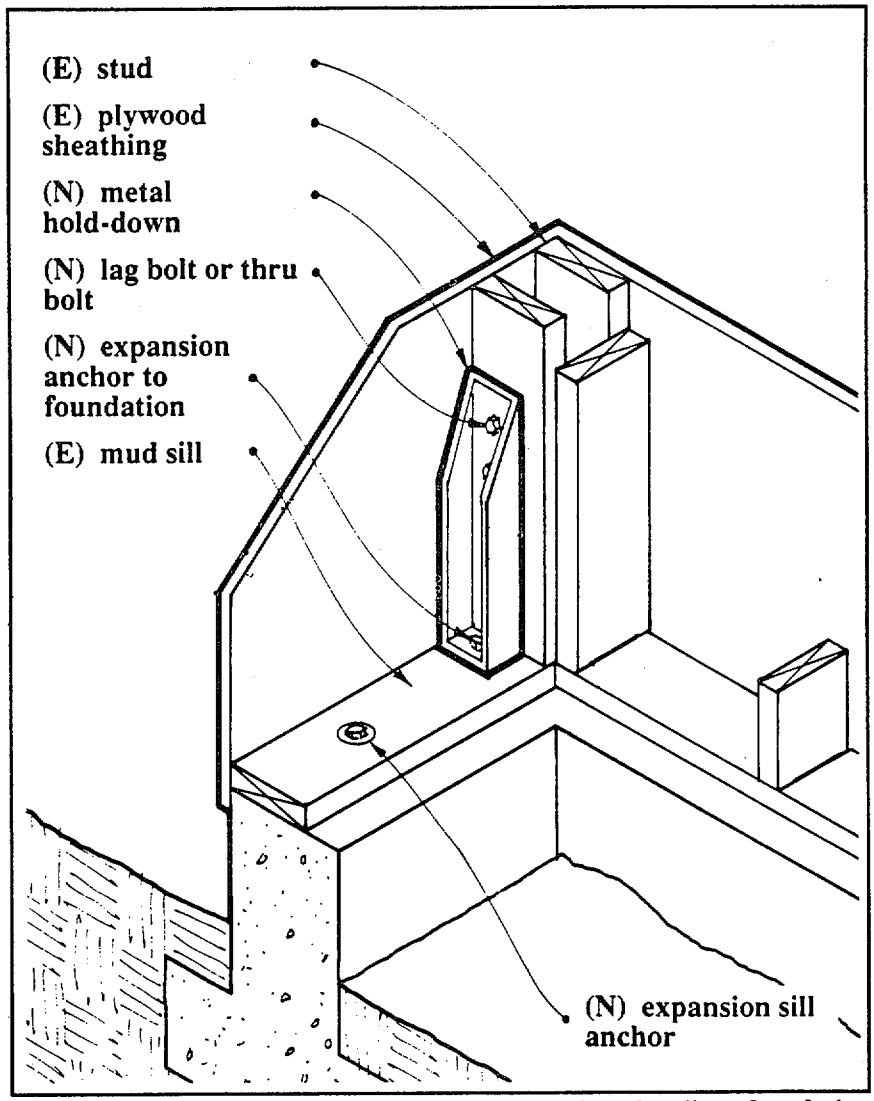

FIGURE 3.8.1.4 Strengthening the uplift capacity of wall to foundation connection.

3.8.2 CONNECTIONS OF METAL STUD SHEAR WALLS

The connections of metal stud walls to the foundations can be strengthened in the same way as discussed above for wood stud walls (e.g., by adding welding, bolting, and screws where appropriate).

3.8.3 CONNECTIONS OF PRECAST CONCRETE SHEAR WALLS

3.8.3.1 Deficiencies

The principal deficiencies of the connections of precast concrete shear walls to the foundation are:

- Inadequate capacity to resist in-plane or out-of-plane shear forces and
- Inadequate hold-down capacity to resist seismic overturning forces.

3.8.3.2 Strengthening Techniques for Shear Capacity

Techniques. Deficient shear capacity of the connections of precast concrete shear walls to the foundation can be improved by:

1. Increasing the capacity of the connection by providing a new steel member connecting the wall to the foundation or the ground floor slab (Figure 3.8.3.2).

2. Increasing the capacity of the connection by adding a new thickness of concrete (either cast-in-place or shotcrete) placed against the precast wall doweling into the existing foundation or ground floor slab.

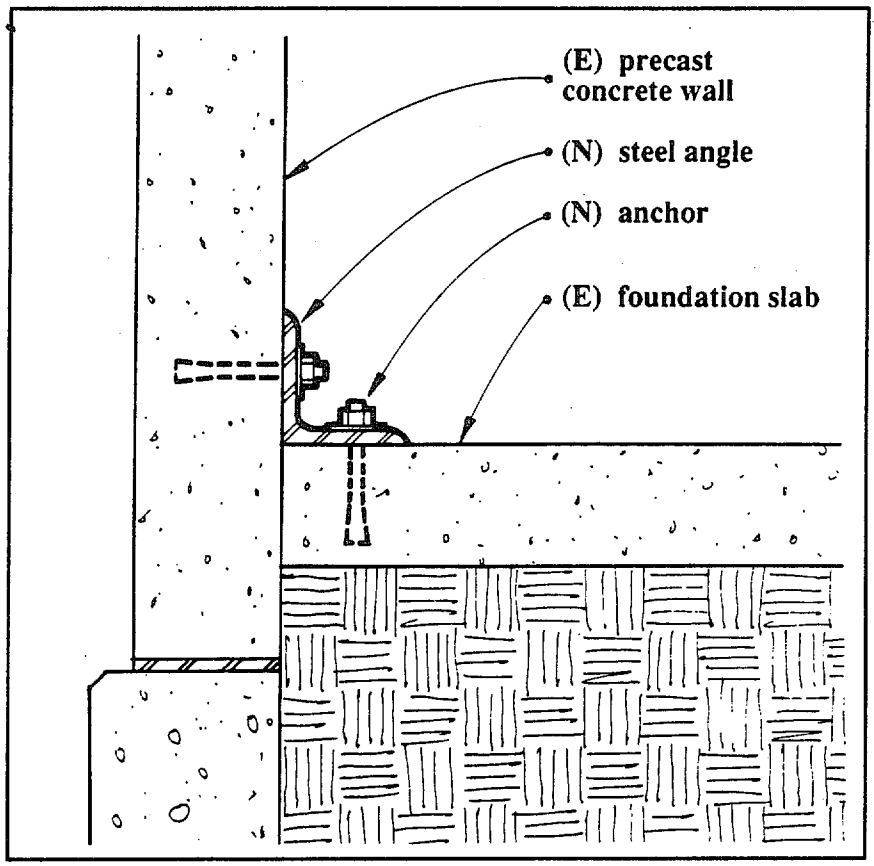

FIGURE 3.8.3.2 Strengthening of a precast concrete wall to foundation connection.

Relative Merits. Early precast concrete wall construction frequently had minimal lateral connection capacity at the foundation. These connections usually can be strengthened most economically by attaching a steel member to the wall and the floor slab or foundation with drilled and grouted anchors or expansion bolts (Technique 1). Care must be taken to place bolts and/or dowels a sufficient distance away from concrete edges to prevent spalling under load. A more costly alternative involves thickening the precast wall with a minimum of 4 inches of new reinforced concrete, either cast-in-place or shotcrete. The new concrete must be anchored to the precast wall and must extend above the base of the wall high enough to develop new dowels drilled into the foundation. The existing foundation then must be checked for the additional load.

3.8.3.3 Strengthening Techniques for Hold-down Capacity

Techniques. Deficient hold-down capacity of the connections of precast concrete shear walls to the foundation can be improved by:

1. Increase the hold-down capacity by removing concrete at the edge of the precast unit to expose the reinforcement, provide new drilled and grouted dowels into the foundation, and pour a new concrete pilaster.

2. Reduce the uplift forces by providing supplemental vertical-resisting elements such as shear walls or braced frames as discussed in Sec. 3.4.

Relative Merits. Deficient hold-down capacity of precast units usually will occur when one unit or a part of one unit is required to resist a significant share of the seismic load. If the wall has sufficient bending and shear capacity, then increasing the hold-down capacity using Technique 1 is usually the most cost-effective. When a wall is comprised of a number of solid (i.e., no significant openings) precast panels, the overturning forces generally will be minimal provided there is adequate vertical shear capacity in the connection between the edges of adjacent panels. In this case, the connections must be checked and, if necessary, strengthened as described in Sec. 3.2.2.

Technique 2 usually is a viable approach only if it is being considered to correct other component deficiencies. When excessive uplift forces are due to inadequate vertical shear capacity in the vertical connections between adjacent precast units, strengthening of those connections (see Sec. 3.2.2) will reduce the uplift forces.

3.8.4 CONNECTION OF BRACED FRAMES

3.8.4.1 Deficiencies

The principal deficiencies of the connections of steel braced frames to the foundation are:

- Inadequate shear capacity and
- Inadequate uplift resistance.

3.8.4.2 Strengthening Techniques for Shear Capacity

Techniques. Deficient shear capacity of the connections of steel braced frames to the foundations can be improved by:

1. Increasing the capacity by providing new steel members welded to the braced frame base plates and anchored to the slab or foundation with drilled and grouted anchor bolts.
2. Reducing the shear loads by providing supplemental steel braced frames as discussed in Sec. 3.4.

Relative Merits. The first alternative generally will be the most cost-effective provided the existing slab or foundation can adequately resist the prescribed shear. Steel collectors welded to the existing steel base plates may be necessary to distribute the shear forces into the slab or foundation. If the existing foundation requires strengthening to provide adequate shear capacity, determining the most cost-effective alternative requires comparing the effort necessary to construct a reinforced concrete foundation to the effort and disruption of functional space required to install supplementary shear walls and their associated foundations and collectors.

3.8.4.3 Strengthening Techniques for Uplift Resistance

Techniques. Deficient uplift resistance capacity of the connections of steel braced frames to the foundations can be improved by:

1. Increasing the capacity by providing new steel members welded to the base plate and anchored to the existing foundation.
2. Reducing the uplift loads by providing supplemental steel braced frames as discussed in Sec. 3.4.

Relative Merits. Inadequate uplift resistance capacity of a steel braced frame seldom results just because of deficient connection to the foundation but is typically a concern reflecting the uplift capacity of the foundation itself. If the foundation is the concern, the techniques discussed in Sec. 3.6 can be considered to correct the

problem. If, in fact, the deficiency is the connection, Technique 1 (providing new connecting members) will be the most economical.

3.8.5 CONNECTIONS OF STEEL MOMENT FRAMES

3.8.5.1 Deficiencies

The principal deficiencies of the connection of a moment frame column to the foundation are:

- Inadequate shear capacity,
- Inadequate flexural capacity, and
- Inadequate uplift capacity.

3.8.5.2 Strengthening Techniques for Shear, Flexural, and Uplift Capacity

Techniques. The techniques for strengthening steel moment frame column base connections to improve shear and flexural capacity also will likely improve the uplift capacity. For this reason a combination of the following alternatives may be utilized to correct a deficient column base connection:

1. Increasing the shear capacity by providing steel shear lugs welded to the base plate and embedded in the foundation.
2. Increasing the shear and tensile capacity by installing additional anchor bolts into the foundation.
3. Increasing the shear capacity by embedding the column in a reinforced concrete pedestal that is bonded or embedded into the existing slab or foundation.

Relative Merits. While it may be possible to strengthen the column and to stiffen the base plate against local bending, it usually is not practical to increase the size of the base plate or the number of anchor bolts without removal and replacement of the base plate. The horizontal column shears may be transferred to the column footing by shear lugs between the base plate and the footing and/or shear in the anchor bolts (Technique 1) and to the ground by passive pressure against the side of the footing. If the column base connection is embedded in a monolithic concrete slab, the slab may be considered for distribution of the shear to the ground by means of any additional existing footings that are connected to the slab. If the column is not embedded in the slab, the same affect can be achieved by adding a concrete pedestal (Technique 3). The interference of this pedestal with the function and operations of the area is an obvious drawback.

3.9 ADDING A NEW SUPPLEMENTAL SYSTEM

Consideration of a new lateral-force-resisting system may be a cost-effective alternative for some seismically deficient structures. The extent of overstress of an existing structure may be such that strengthening the existing elements is very costly and adding supplemental vertical-resisting elements (as discussed in Sec. 3.4) becomes so extensive that an entirely new supplemental lateral-force-resisting system is the best way to resist the prescribed forces.

Adding a new supplemental lateral-force-resisting system also may be the most cost-effective alternative when preservation of architectural features is of utmost importance, (e.g., in a historical monument).

3.9.1 SUPPLEMENTAL BRACED FRAME SYSTEM

Moment frame buildings that have insufficient lateral resistance can be converted to a braced frame system. This retrofit can add substantial lateral capacity with a minimum of additional weight. Changing a moment frame to a braced frame also will significantly reduce drifts and, hence, architectural damage. Buildings with weak shear walls (either wood or unreinforced masonry) also have been strengthened using steel braced frames. Figure 3.9.1 shows the central storeroom at Lawrence Berkeley Laboratory in Berkeley, California, in which an X-braced steel frame was used to strengthen the structure. The principal disadvantages of adding braced frames are the potential change in the architectural character and the potential obstruction of accessways and window views. Additionally, the conversion of moment frames to braced frames may increase demand on and consequently necessitate an upgrade of the existing foundation.

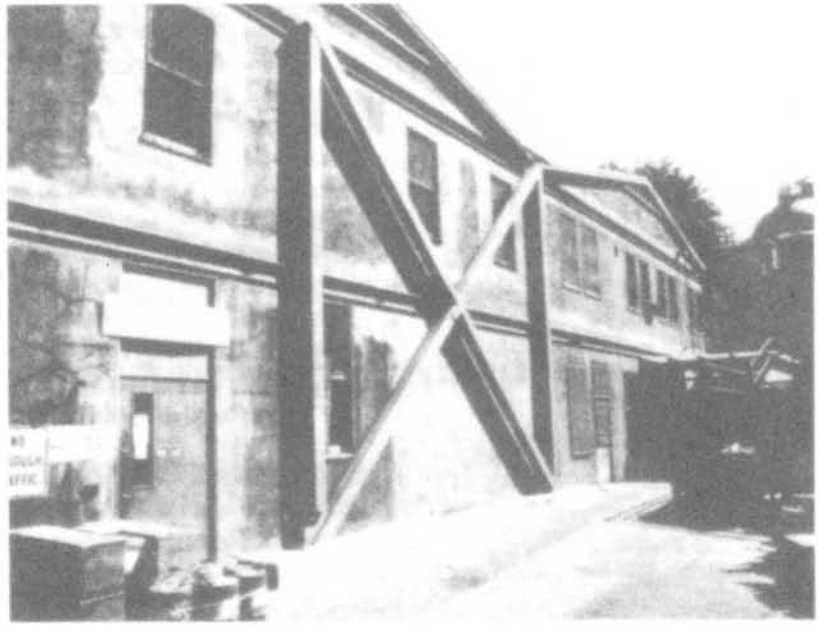

FIGURE 3.9.1 Seismic strengthening using a supplemental braced frame system.

3.9.2 NEW SHEAR WALL SYSTEM

The addition of a new reinforced concrete shear wall system to an unreinforced masonry structure can meet the requirements for a seismic upgrade in certain cases. Margaret Jacks Hall on the Stanford University campus (Figure 3.9.2a) is an example of a building for which preservation of the architectural character was a prime consideration. The existing unreinforced masonry was determined through testing to provide little lateral capacity. The exterior sandstone masonry was retained, and the interior was gutted. New concrete walls were pneumatically applied to the old masonry, and new floors, columns, and a roof were constructed. Another example of the need to preserve the historically significant architectural character of a building is the California State Capitol (Figure 3.9.2b). In essence, the existing stone facade was retained while new lateral- and (in large part) vertical-force-resisting systems were constructed.

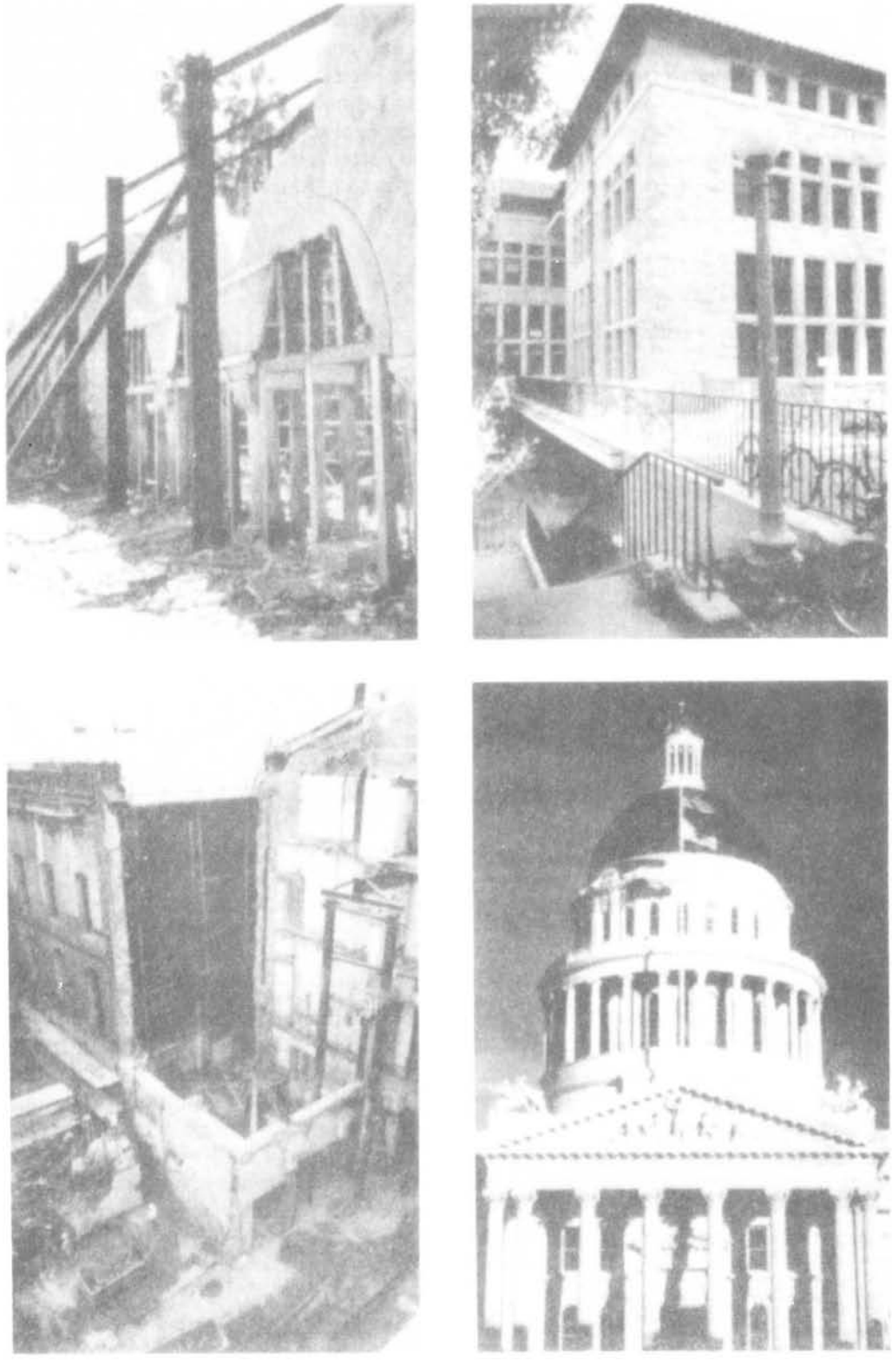

FIGURE 3.9.2 Seismic strengthening by providing a new shear wall system.

3.9.3 STRUCTURAL ADDITIONS

A deficient building may be strengthened by a structural building addition that is designed to resist the seismic forces generated within the addition as well as all or a portion of the forces from the existing building. This alternative has the obvious advantage of generating additional useful space while upgrading the existing building. IBM Building 12 in San Jose, California, is an example of an existing building bracketed by two new additions designed to carry the entire load (Figure 3.9.3). Few modifications to the interior of the existing building were required in this approach.

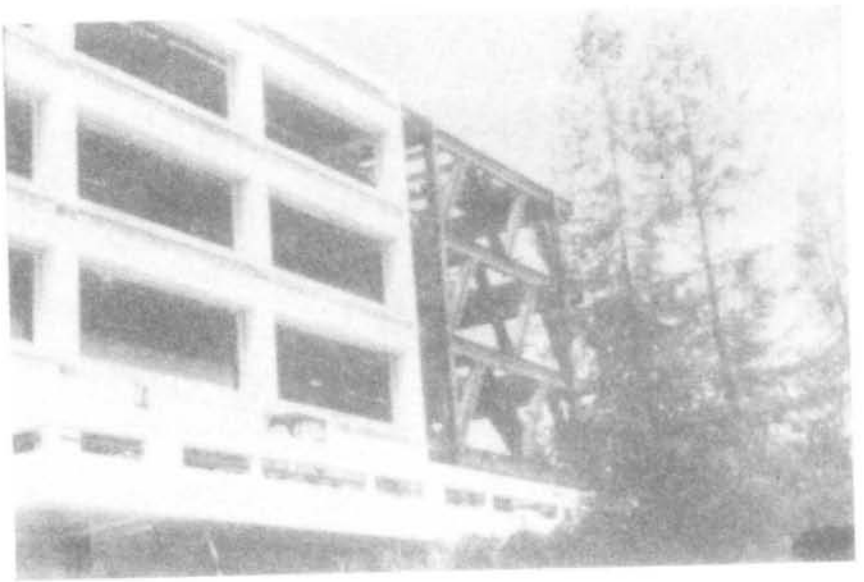

FIGURE 3.9.3 Seismic strengthening with a new building addition.