Homebuilders' Guide to Earthquake Resistant Design and Construction

FEMA 232 - June 2006

FEMA

ICC
INTERNATIONAL CODE COUNCIL®
People Helping People Build a Safer World™

nehrp

BUILDING SEISMIC SAFETY COUNCIL

of the National Institute of Building Sciences

Homebuilders' Guide to Earthquake-Resistant Design and Construction

FEMA 232 — June 2006

Prepared by the
Building Seismic Safety Council
for the
Federal Emergency Management Agency
of the Department of Homeland Security

National Institute of Building Sciences
Washington, D.C.

NOTICE: Any opinions, findings, conclusions, or recommendations expressed in this publication do not necessarily reflect the views of the Federal Emergency Management Agency. Additionally, neither FEMA nor any of its employees make any warranty, expressed or implied, nor assume any legal liability or responsibility for the accuracy, completeness, or usefulness of any information, product, or process included in this publication.

The opinions expressed herein regarding the requirements of the *International Residential Code* do not necessarily reflect the official opinion of the International Code Council. The building official in a jurisdiction has the authority to render interpretation of the code.

This report was prepared under Contract EMW-1998-CO-0419 between the Federal Emergency Management Agency and the National Institute of Building Sciences.

For further information on the Building Seismic Safety Council, see the Council's website -- www.bssconline.org -- or contact the Building Seismic Safety Council, 1090 Vermont, Avenue, N.W., Suite 700, Washington, D.C. 20005; phone 202-289-7800; fax 202-289-1092; e-mail bssc@nibs.org.

PREFACE

The Federal Emergency Management Agency (FEMA), which is part of the Department of Homeland Security, works to reduce the ever-increasing cost that disasters inflict on the nation. Preventing losses before they occur by designing and constructing buildings and their components to withstand anticipated forces from various hazards is one of the key components of mitigation and is one of the most effective ways of reducing the cost of future disasters.

The National Earthquake Hazards Reduction Program (NEHRP) is the federal program established to address the nation's earthquake threat. NEHRP seeks to resolve two basic issues: how will earthquakes affect us and how do we best apply our resources to reduce their impact on our nation. The program was established by Congress under the Earthquake Hazards Reduction Act of 1977 (Public Law 95-124) and was the result of years of examination of the earthquake hazard and possible mitigation measures. Under the NEHRP, FEMA is responsible for supporting program implementation activities, including the development, publication, and dissemination of technical design and construction guidance documents.

Generally, there has not been much technical guidance addressing residential buildings unless they are located in areas of high seismicity or exceed a certain size or height. This is because most residential buildings were thought to perform fairly well in earthquakes due to their low mass and simple construction. While buildings may not normally experience catastrophic collapse, they can still suffer significant amounts of damage, rendering them uninhabitable. This is especially true when construction techniques are less than adequate. What is particularly important from FEMA's point of view is that, given the sheer number of this type of building, even minor damage represents a significant loss potential and temporary housing demand that will need to be addressed after an earthquake by all levels of government.

After the San Fernando earthquake in 1971, a study of residential buildings and the damage they suffered was conducted by a team of experts under funding from the Department of Housing and Urban Development (HUD) and the National Science Foundation (NSF). HUD utilized these data to develop a non-engineering document entitled *Home Builder's Guide to Earthquake Design*. This manual, originally published in 1980, provided easy-to-follow information to the average homebuilder on steps for reducing potential earthquake damage. In July 1992 it was reprinted as a joint FEMA-HUD document, also known as FEMA 232. The manual was subsequently updated for FEMA and the revised publication, *Home Builders Guide to Seismic Resistant Construction* (FEMA 232), was published in August 1998.

Since that time, there have been several significant changes that needed to be incorporated into this document to keep it current. The first and most important change was the completion of the FEMA-funded Consortium of Universities for Research in Earthquake Engineering (CUREE)-Caltech Woodframe Project. This project was funded using FEMA Hazard Mitigation Grant Program funds available after the Northridge earthquake and was designed to address the unexpected amount of damage suffered by wood frame residential structures. Similar to the successful FEMA/SAC Steel Moment Frame Buildings Project, this effort combined academic research and testing of wood frame buildings and components with the development of

engineering-based design guidance for future construction. The project yielded some interesting findings that needed to be captured in a guidance document.

A second change was the development and publication of the 2000 *International Residential Code* (*IRC*) by the International Code Council. This model residential building code replaced the Council of American Building Officials (CABO) *One- and Two-Family Dwelling Code*, which did not adequately address earthquake loads. The *IRC* reflects on the *NEHRP Recommended Provisions* and is intended to adequately address the earthquake hazard.

This publication presents seismic design and construction guidance for one- and two-family houses in a manner that can be utilized by homebuilders, knowledgeable homeowners, and other non-engineers. It incorporates and references the prescriptive provisions of the 2003 *International Residential Code* as well as the results of the FEMA-funded CUREE-Caltech Woodframe Project. The manual includes prescriptive building detail plans based on state-of-the-art earthquake-resistant design for use by homebuilders and others in the construction of a non-engineered residential structure. Further, the manual also uses the results of recent loss investigations as well as current research and analysis results to identify a number of specific **above-code** measures for improved earthquake performance along with their associated costs. A typical modern house is used to illustrate the application and benefits of **above-code** measures. This manual replaces the *Home Builders Guide to Seismic Resistant Construction* (FEMA 232) published by FEMA in August 1998 as well as earlier FEMA and HUD versions.

Finally, FEMA wishes to express its deepest gratitude for the significant efforts of primary authors J. Daniel Dolan, Kelly Cobeen, and James Russell; the members of the Project Team; the many reviewers and workshop attendees; and the BSSC Board of Direction and staff. Their dedication and hard work made this document possible.

Department of Homeland Security/Federal Emergency Management Agency

ACKNOWLEDGEMENTS

The Building Seismic Safety Council is grateful to all those involved in developing this updated guide to earthquake-resistant home design and construction. As chairman of the BSSC Board of Direction, it is my pleasure to express appreciation to the members of the team developing this guide:

J. Daniel Dolan, PhD, PE, Professor, Washington State University, Wood Materials and Engineering Laboratory, Pullman (team leader)

Kelly Cobeen, Structural Engineer, Cobeen and Associates Structural Engineering, Lafayette, California

James E. Russell, Building Codes Consultant, Concord, California

Special thanks also go to Gerald Jones, retired building official, and Douglas Smits, the chief building official of Charleston, South Carolina, who served with me and the writers on the committee overseeing this project.

The BSSC also is grateful to those who participated in a workshop discussion (Appendix F) of an early draft of this guide and willingly shared their experiences with respect to earthquake-resistant home building. Special thanks go to those individuals who reviewed and commented on subsequent drafts of this document; their input has made this a much more useful guide.

I also wish to thank the members of the BSSC Board of Direction who have recognized the importance of this effort and provided sage advice throughout the project. Special thanks also are due to the BSSC staff who worked untiringly behind the scenes to coordinate the project resulting in this report.

Finally the BSSC is grateful to Michael Mahoney, FEMA project officer, for his insight and ongoing support, to the International Code Council for their work in reviewing and disseminating this guide, and to the National Association of Home Builders for their assistance in disseminating this guide.

Jim. W. Sealy
Chairman, BSSC Board of Direction

TABLE OF CONTENTS

Preface ..... **iii**

Acknowledgements ..... **v**

Executive Summary **1**

Chapter 1 Introduction **3**
1.1 Background 3
1.2 Above-code Recommendations 4
1.3 The *International Residential Code* 5
1.4 *IRC* Seismic Design Categories 5
1.5 Building Response 10
1.6 Important Concepts Concerning Homesite 12
1.7 Model House Used for Guide Analysis 14
1.8 Other Hazards 17

Chapter 2 Earthquake-Resistance Requirements **21**
2.1 *IRC* General Earthquake Limitations 21
2.2 Load Path 22
2.3 House Configuration Irregularities 29

Chapter 3 Foundations and Foundation Walls **49**
3.1 General Foundation Requirements 49
3.2 Concrete Foundations 53
3.3 Masonry Foundations 56
3.4 Footing Width 57
3.5 Special Soil Conditions 58
3.6 Foundation Resistance to Sliding from Lateral Loads 59
3.7 Special Considerations for Cut and Fill Sites 61
3.8 Foundation Walls 62
3.9 Foundation Wall Thickness, Height, and Required Reinforcing 63
3.10 Wood-Framed Wall Bottom Plate and Foundation Sill Plate Anchorage 64
3.11 Required Location for Anchor Bolts along Exterior Walls 65
3.12 Required Anchorage along Interior Braced Walls 65
3.13 Anchoring of Interior Braced Walls in SDCs D_1 and D_2 67

Chapter 4 Floor Construction **69**
4.1 General Floor Construction Requirements 69
4.2 Wood-Framed Floor Systems 70
4.3 Cantilevered Floors 71
4.4 Requirements for Blocking 73
4.5 Connection of Floor Joists to Wall Top Plate or Foundation Sill Plate Below 75
4.6 Floor Sheathing 77

4.7 Lateral Capacity Issues for Wood Framed Floors Using Wood Structural Panels.....77
4.8 Concrete Slab-on-Grade Floors.....81

Chapter 5 Walls.....83
5.1 Wood Light-Frame Construction.....83
5.2 Stone and Masonry Veneer.....103
5.3 Cold-formed Steel Houses.....107
5.4 Masonry Wall Houses.....110
5.5 Insulating Concrete Form (ICF) Wall Houses.....115

Chapter 6 Roof-Ceiling Systems.....121
6.1 General Roof-Ceiling Requirements.....121
6.2 Special Framing Considerations.....122
6.3 Blocking and Lateral Load Paths for Roof Systems.....124
6.4 Connection of Ceiling Joists and Rafters to Walls Below.....126
6.5 Roof Sheathing.....126
6.6 Lateral Capacity Issues for Wood Framed Roofs.....128
6.7 Quality Control.....129

Chapter 7 Chimneys, Fireplaces, Balconies, and Decks.....131
7.1 Chimneys and Fireplaces.....131
7.2 Balconies and Decks.....137

Chapter 8 Anchorage of Home Contents.....141
8.1 General.....141
8.2 Water Heater Anchorage.....141
8.3 Securing Other Items.....144

Chapter 9 Existing Houses.....151
9.1 Additions and Alterations.....151
9.2 Earthquake Upgrade Measures.....154

APPENDICES

Appendix A Analysis of Model House Used in This Guide.....167
A1 Model House.....167
A2 Analysis Using Standard Engineering Design Methods.....171
A3 Analysis Using Nonlinear Methods.....171
A4 Analysis Results.....174

Appendix B Earthquake Provisions Checklist for Builders and Designers.....179

Appendix C Earthquake Provisions Checklist for Designers and Plan Checkers.....187

Appendix D Significant Changes for the 2006 *International Residential Code*.....193

D1 Revised Seismic Design Maps.....193
D2 Addition of Seismic Design Category D_0.....193
D3 Change in Applicability of Irregular Building Requirements 199
D4 Clarification and Addition of Requirement for Masonry Veneer.....199

Appendix E References and Additional Resources.....201

Appendix F Homebuilders' Guide Project Participants.....207

LIST OF FIGURES

Figure 1-1 Seismic Design Categories..... 6-9
Figure 1-2 Forces induced in a house due to earthquake ground motion 10
Figure 1-3 Concept of actual vs. code seismic forces.....11
Figure 1-4 Concept of ductility.....11
Figure 1-5 Definition of drift 12
Figure 1-6 A house damaged due to fault movement 13
Figure 1-7 Houses damaged due to a landslide at the site 13
Figure 1-8 Elevation of model house used as an example for this guide 14
Figure 1-9 Model house floor plan 15

Figure 2-1 Chain illustrating load path concept.....22
Figure 2-2 Lateral loads induced in a building due to wind or earthquakes.....23
Figure 2-3 Loading and deflection of roof, ceiling, and floor systems.....24
Figure 2-4 Loading and deflection of bracing wall systems.....25
Figure 2-5 Load transfer between components in a building 26
Figure 2-6 Horizontal load path connections and deformations.....27
Figure 2-7 Overturning load path connections and deformations 28
Figure 2-8 Depiction of ideal building configuration for earthquake resistance 30
Figure 2-9 Irregular building configuration with open front 31
Figure 2-10 Rotational response and resistance to torsion 31
Figure 2-11 Concentration of loads and possible damage and failure due to irregular plan 32
Figure 2-12 Roof-level damage to building with a T-shaped plan 33
Figure 2-13 Deformation pattern due to soft-story behavior.....34
Figure 2-14 Change in deformation patterns associated with soft-story irregularity 34
Figure 2-15 House experiencing soft- and weak-story behavior 35
Figure 2-16 Apartment building experiencing soft- and weak-story behavior.....35
Figure 2-17 Detailing required for stepped foundation walls.....36

Figure 3-1 Perimeter foundation with separately placed footing and stem wall 49
Figure 3-2 Sliding action resisted by foundation.....50
Figure 3-3 Overturning action resisted by foundation.....51
Figure 3-4 Interior braced wall and floor framing 52
Figure 3-5 Foundation requirements for interior braced wall line on slab-on-grade construction 52
Figure 3-6 Recommended minimum reinforcement for concrete footings and stem walls.....54

Figure 3-7 Above-code horizontal reinforcing lap at corners and intersections.....54
Figure 3-8 Above-code use of vertical dowels to connect a slab-on-grade to a separately poured footing.....55
Figure 3-9 Inverted-T footing dimensions.....58
Figure 3-10 Lateral resistance provided by foundation.....59
Figure 3-11 Above-code stepped foundation reinforcing detail.....60
Figure 3-12 Foundation supported on rock and fill.....61
Figure 3-13 Example of damage caused in building on cut and fill site.....62
Figure 3-14 Interior braced wall on slab-on-grade.....66

Figure 4-1 An unblocked floor diaphragm.....69
Figure 4-2 Slab-on-grade and perimeter footing transfer loads into soil.....70
Figure 4-3 Cantilevered floor restrictions.....71
Figure 4-4 Cantilevered joist at braced wall above.....73
Figure 4-5 Interior bearing line.....74
Figure 4-6 Blocking below interior braced wall.....74
Figure 4-7 Blocking floor joists spaced apart for piping in floor.....75
Figure 4-8 Toe nail configuration requirements.....76
Figure 4-9 Blocked diaphragm configuration.....79
Figure 4-10 Diaphragm loads on long and short sides.....79
Figure 4-11 Reinforcing straps at large diaphragm openings.....80

Figure 5-1 Sliding, overturning, and racking action resisted by walls and foundation.....84
Figure 5-2 Exploded view illustrating load paths.....85
Figure 5-3 Wall action for resisting lateral loads.....86
Figure 5-4 Exploded view of typical residential wall segment.....86
Figure 5-5 Detailing differences for three options when using wood structural panel sheathed walls.....87
Figure 5-6a Plan view of crawl space for model house in SDC C.....92
Figure 5-6b Plan view of first floor for model house in SDC C.....93
Figure 5-6c Plan view of second floor for model house in SDC C.....94
Figure 5-7a Plan view of crawl space for model house in SDC D_2.....95
Figure 5-7b Plan view of first floor for model house in SDC D_2.....96
Figure 5-7c Plan view of second floor for model house in SDC D_2.....97
Figure 5-8 Properly and overdriven nails.....98
Figure 5-9 Illustration of concept of equal numbers of fasteners in line for symmetric nailing schedule.....100
Figure 5-10 Sheathing detail for extending the sheathing over the band joist.....102
Figure 5-11 Applications of masonry and stone veneer.....103
Figure 5-12 Stone veneer damage during the earthquake in Northridge, California.....104
Figure 5-13 Cold-formed steel house under construction.....107
Figure 5-14 House constructed with masonry walls.....111
Figure 5-15 Symmetric layout of walls to distribute loads uniformly and thereby prevent torsion.....114
Figure 5-16 Insulated concrete form house under construction.....116
Figure 5-17 Illustration of cross-grain bending of wood ledger.....118

Figure 6-1 Typical light-frame roof-ceiling system.....121
Figure 6-2 Ridge board for 12:12 pitch roof.....123
Figure 6-3 Gable end wall or gable truss bracing.....124
Figure 6-4 Blocking at rafters to exterior wall.....125
Figure 6-5 Typical roof diaphragm sheathing nailing when wood structural panels are used 127

Figure 7-1 Chimney damage.....131
Figure 7-2 Chimney damage in Northridge earthquake 132
Figure 7-3 Locations for earthquake anchorage of masonry chimney at exterior house wall.....133
Figure 7-4 Chimney section showing earthquake anchorage 134
Figure 7-5 Anchorage detail for framing parallel to exterior wall.....134
Figure 7-6 Anchorage detail for framing perpendicular to exterior wall.....135
Figure 7-7 Factory-built flue and light-frame enclosure.....136
Figure 7-8 Collapsed factory-built chimney, light-frame enclosure, and deck 136
Figure 7-9 Decks and balconies in residential contruction.....138
Figure 7-10 Hold-down device providing positive connection of deck framing to house framing.....139

Figures 8-1a & 8-1b Securing a water heater with wall bracing 142
Figures 8-2a & 8-2b Securing a water heater with corner bracing.....143
Figures 8-3 a-f Reproductions of pages from FEMA 74 on securing household goods..... 145-150

Figure 9-1 Alterations to existing house.....152
Figure 9-2 Horizontal addition and vertical addition.....153
Figure 9-3 Cape Mendocino earthquake damage to cripple wall house with slab-on-grade additions.....154
Figure 9-4 Common anchorage configurations 156
Figure 9-5a House with collapsed cripple walls.....157
Figure 9-5b A house with severe damage due to cripple wall collapse.....157
Figure 9-6 Cripple wall bracing.....158
Figure 9-7 Weak and soft story bracing.....159
Figure 9-8 Common open-front occurrences in one- and two-family detached houses.....160
Figure 9-9 Detailing of narrow bracing wall piers at open fronts.....161
Figure 9-10 House located on a hillside site damaged during Northridge, California, earthquake.....162
Figure 9-11 Anchorage of floor framing to the uphill foundation.....163
Figure 9-12 Split-level ties for floor framing 164
Figure 9-13 Anchorage of concrete or masonry walls to floor, roof, or ceiling framing 165

Figure A1 Slab-on-grade base 168
Figure A2 Level cripple wall base.....168
Figure A3 Hillside base 168
Figure A4 Basement 168
Figure A5 Analysis model 172
Figure A6 Hyseteric parameters for model.....172

Figure D1 Seismic Design Categories, Site Class D 194-198

LIST OF TABLES

Table 2-1 Load Path Connections for Horizontal Sliding 38-40
Table 2-2 Load Path Connections for Overturning..... 41-43
Table 2-3 *IRC* House Configuration Irregularities 44-47

Table 3-1 Summary of 2003 *IRC* Continuous Foundation and Anchor Bolt Requirements for Braced Wall Lines in One- and Two-family Houses 68
Table 3-2 Summary of 2003 *IRC* Continuous Foundation and Anchor Bolt Requirements for Bearing Walls in One- and Two-family Houses 68

Table 5-1 Braced Wall Panel Construction Methods (Materials) Recognized by the *IRC* 88
Table 5-2 *IRC* Sheathing Requirements for Seismic Design Categories C, D_1, and D_2 90

Table A-1 Example Wall Bracing per 2003 *IRC*, Slab-on-grade Base Condition.....170

Table A-2 Hysteretic Parameters Used for Nonlinear Dynamic Model 173

Table A-3 Selected Results for *IRC* Bracing Provisions, Slab-on-grade Base Condition.....175

Table A-4 Selected Results for Above-Code Measures, Slab-on-grade Base Condition 176

EXECUTIVE SUMMARY

This guide provides information on current best practices for earthquake-resistant house design and construction for use by builders, designers, code enforcement personnel, and potential homeowners. It incorporates lessons learned from the 1989 Loma Prieta and 1994 Northridge earthquakes as well as knowledge gained from the FEMA-funded CUREE-Caltech Woodframe Project. It also introduces and explains the effects of earthquake loads on one- and two-family detached houses and identifies the requirements of the 2003 *International Residential Code (IRC)* intended to resist these loads. The stated purpose of the *IRC* is to provide:

> . . . minimum requirements to safeguard the public safety, health, and general welfare, through affordability, structural strength, means of egress facilities, stability, sanitation, light and ventilation, energy conservation and safety to life and property from fire and other hazards attributed to the built environment.

Because the building code requirements are minimums, a house and its contents still may be damaged in an earthquake even if it was designed and built to comply with the code. Research has shown, however, that earthquake damage to a house can be reduced for a relatively small increase in construction cost. This guide identifies **above-code** techniques for improving earthquake performance and presents an estimate of their cost. Note that the information presented in this guide is not intended to replace the *IRC* or any applicable state or local building code, and the reader is urged to consult with the local building department before applying any of the guidance presented in this document.

The information presented in this guide applies only to one- and two-family detached houses constructed using the nonengineered prescriptive construction provisions of the *IRC*. Applicable *IRC* limits on building configuration and construction are described.

A typical model house is used to illustrate the concepts discussed and to identify approximate deflections under earthquake loading, which permits performance to be compared for various building configurations using the minimum code requirements and the **above-code** techniques. The **above-code** recommendations are based on an analysis of the model house as well as comparative tests performed by various researchers and the lessons learned from investigation of residential building performance in past earthquakes. A nonlinear time-history analysis was performed for the model building using the SAWS computer program developed as part of the CUREE-Caltech Woodframe Project (Folz and Filiatrault, 2002). Details of the analysis are presented in Appendix A.

Additional appendices feature checklists for builders, designers, and plan checkers; explain significant differences between the 2003 and 2006 editions of the *IRC*; and present a list of reference materials.

Chapter 1
INTRODUCTION

1.1 BACKGROUND

After the 1971 earthquake in San Fernando, California, a study of residential buildings and the types of damage they suffered was conducted by a team of experts with funding from the Department of Housing and Urban Development (HUD) and the National Science Foundation (NSF). Subsequently, HUD utilized the results of that study to develop a nonengineering guidance document entitled *Home Builder's Guide to Earthquake Design*. This manual was originally published in June 1980 to provide homebuilders with easy-to-follow guidance for reducing potential earthquake damage.

In July 1992, the Federal Emergency Management Agency (FEMA) reissued the HUD manual with some updated material as a joint FEMA/HUD publication identified as FEMA 232. By the mid-1990s, it was apparent that this publication was in need of updating, especially to take into account some of the early findings from the 1994 Northridge earthquake. This update was prepared for FEMA by SOHA Engineers and was published by FEMA in August 1998 as the *Home Builders Guide to Seismic Resistant Construction*, again as FEMA 232.

Since that time, significant events have occurred warranting another updating of the guide. First was completion of the FEMA-funded CUREE-Caltech Woodframe Project. This project, funded under the FEMA Hazard Mitigation Grant Program, addressed the unexpected damage suffered by woodframe residential structures during the Northridge earthquake. Project testing of complete woodframe buildings and individual components that resist or transmit earthquake loads yielded some interesting findings that needed to be captured in a guidance document.

Another significant event occurred in 1994 when the International Code Council was established to develop a single set of comprehensive and coordinated national model construction codes. Prior to this time, the three organizations that founded the ICC – the Building Officials and Code Administrators International, Inc. (BOCAI), the International Conference of Building Officials (ICBO), and Southern Building Code Congress International, Inc. (SBCCI) – each published a set of model building codes that generally were used in distinct regions of the nation. The initial editions of the ICC's *International Building Code* (*IBC*) and *International Residential Code* (*IRC*) were published in 2000 and updates were issued in 2003 and 2006. The *IBC* replaced BOCAI's *National Building Code*, ICBO's *Uniform Building Code*, and SBCCI's *Standard Building* Code. For prescriptive residential construction, the *IRC* replaced the *One- and Two-Family Dwelling Code* of the Council of American Building Officials (CABO). (Note that the *IBC* contains prescriptive and engineering provisions for light-frame wood construction. In certain cases, the *IBC* prescriptive provisions are different from those in the *IRC*. The National Fire Protection Association's *NFPA 5000 Building Construction and Safety Code* does not contain provisions for prescriptive residential construction.)

In order to address these and other changes, FEMA initiated a complete rewrite of the 1998 document; this guide, which retains the FEMA 232 designation, is the result. One- and two-family detached houses of light-frame wood construction are addressed; however, the discussion is relevant to other materials of construction likely to be used for houses including light-frame cold-formed steel and insulated concrete form. Explained in this guide are:

- The basic principles of earthquake-resistant design,
- The specific prescriptive seismic provisions of the 2003 *International Residential Code*,
- The results of recent research and analysis, and
- Measures exceeding code requirements that are expected to reduce the amount of damage from an earthquake (see Section 1.2 below).

The guide also includes limited guidance on applying the principles of earthquake resistance to house additions and alterations and on anchoring typical house furnishings and equipment such as hot water heaters. Appendices describe the analyses performed in developing this guide, present checklists for builders, designers, and plan checkers; explain significant differences between the 2003 and 2006 editions of the *IRC*; and identify reference materials and participants in the project resulting in this guide.

1.2 ABOVE-CODE RECOMMENDATIONS

The **above-code** recommendations included in this guide describe details that, when incorporated into a house, can be expected to result in improved performance above that expected from a house designed and constructed following the minimum requirements of the *IRC*. The **above-code** techniques reduce the deformations of the house during an earthquake and therefore reduce the amount of damage. **Above-code** recommendations are printed in boldface type in this guide and appear, with associated discussion, in boxes. While the **above-code** recommendations are expected to improve the performance of a house in an earthquake and thereby reduce damage, many will involve some added costs. The costs associated with **above-code** recommendations presented in this guide are based on an estimate prepared by a homebuilder in the Seattle area and are cited as a percentage of the basic framing cost for the model house analyzed during development of this guide. Presenting the cost increase for the various **above-code** recommendations in these terms permits homebuilders in any part of the nation to easily determine what the associated added cost will be in his or her area, thus allowing builders and potential homeowners to make reasonable cost-benefit decisions regarding implementation of the recommendations.

1.3 THE *INTERNATIONAL RESIDENTIAL CODE*

As already indicated, this guide focuses on the ICC's 2003 *International Residential Code*, which provides a comprehensive collection of requirements for prescriptive (nonengineered) residential construction. The *IRC*'s stated purpose is to provide:

> . . . minimum requirements to safeguard the public safety, health, and general welfare, through affordability, structural strength, means of egress facilities, stability, sanitation, light and ventilation, energy conservation and safety to life and property from fire and other hazards attributed to the built environment.

The *IRC* addresses other natural hazards in addition to earthquakes (up to limits described in the *IRC* scoping provisions). When considering **above-code** recommendations, construction details intended to reduce the risk from one hazard may be slightly different from those needed to resist another. Thus, care should be taken to consider all natural hazards that present a risk to a specific site and to formulate an appropriate mitigation strategy in accordance with the jurisdiction's building code. Additional guidance is provided in Section 1.8 of this guide.

1.4 *IRC* SEISMIC DESIGN CATEGORIES

The *IRC* designates the level of potential seismic hazard for dwellings by assigning a house to a Seismic Design Category (SDC) based on its location. The *IRC* SDCs are A, B, C, D_1, D_2 and E, with A representing the lowest level of seismic risk applicable to residential construction and E, the highest. All residential buildings (detached houses and townhouses) in regions with SDC designations A and B, the lowest levels of seismic risk, are exempt from the seismic requirements of the *IRC*. SDC E regions have such a high level of seismic risk that, with a few exceptions, houses in these regions fall outside the scope of the *IRC* and must be designed using engineering principles following the *International Building Code* or *NFPA 5000*.

Whether or not required by the *IRC* and across all SDCs from A to E, many of the recommendations in this guide will improve the resistance of a dwelling to seismic forces, wind forces, and possibly the effects of other natural hazards. The discussion and examples presented in this guide focus on houses located in SDCs C, D_1, and D_2.

All U.S. model building codes provide maps identifying the seismic hazard. The 2003 *IRC* seismic design maps (*IRC* Figure R301.1(2) shown in Figure 1-1 designate the Seismic Design Categories for the nation and U.S. territories. It is a simplified version of the maps referenced by the *IBC* and *NFPA 5000* for all building types. The legend correlates the Seismic Design Category with the acceleration expected at a location in terms of gravity (g). A value of 100% g is equal to the vertical acceleration effects of gravity on Earth. More detailed information can be found for a particular building site using a CD-ROM available with the building codes and from FEMA; the CD allows the user to input the latitude and longitude coordinates of the site or the zip code. Zip codes should be used with caution because they may not reflect the highest possible SDC in the area covered by the postal zip code. Similar information is available on a U.S. Geological Survey (USGS) website – http://earthquake.usgs.gov/research/hazmaps (click on "seismic design values for buildings").

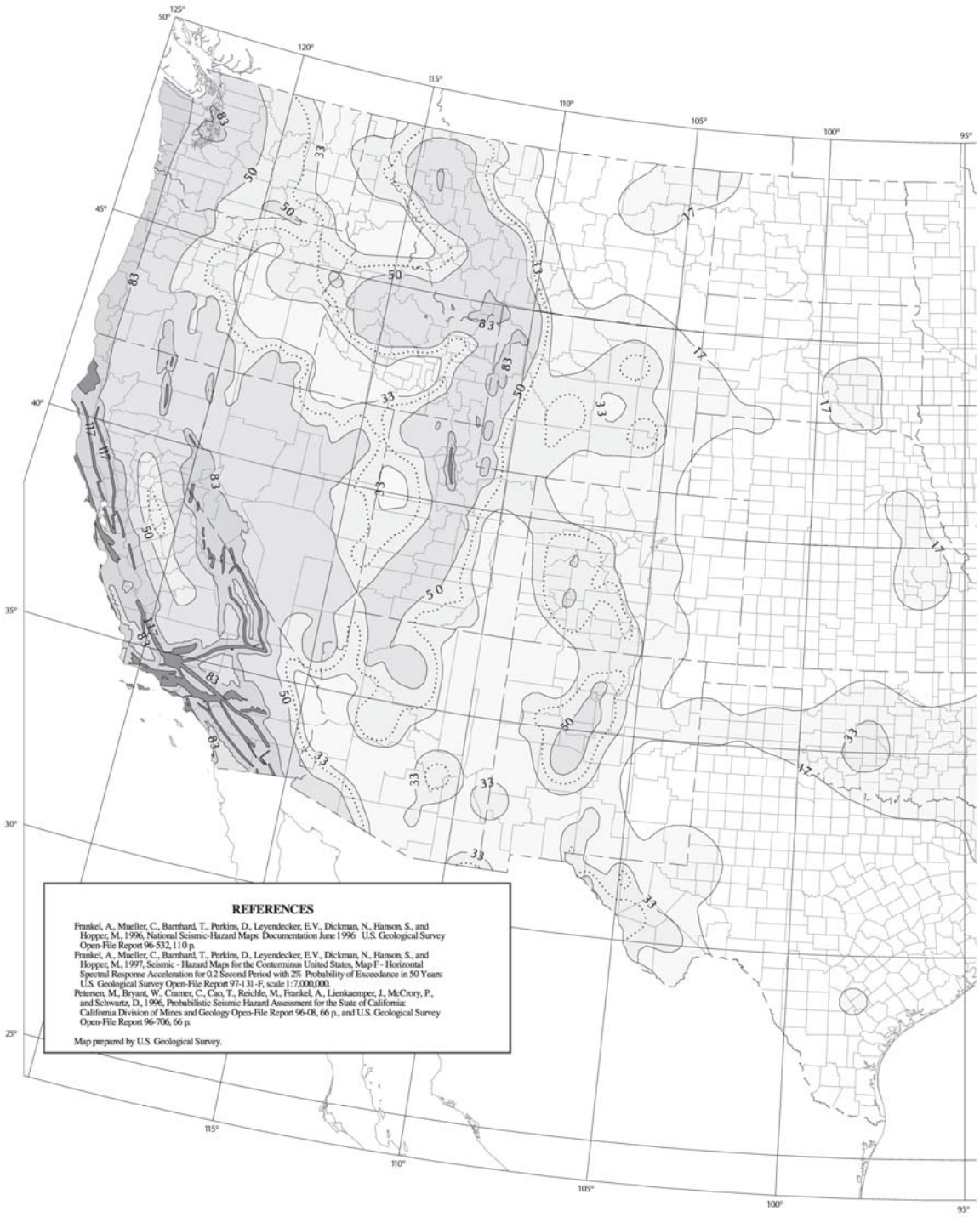

Figure 1-1 Seismic Design Categories – Site Class D.

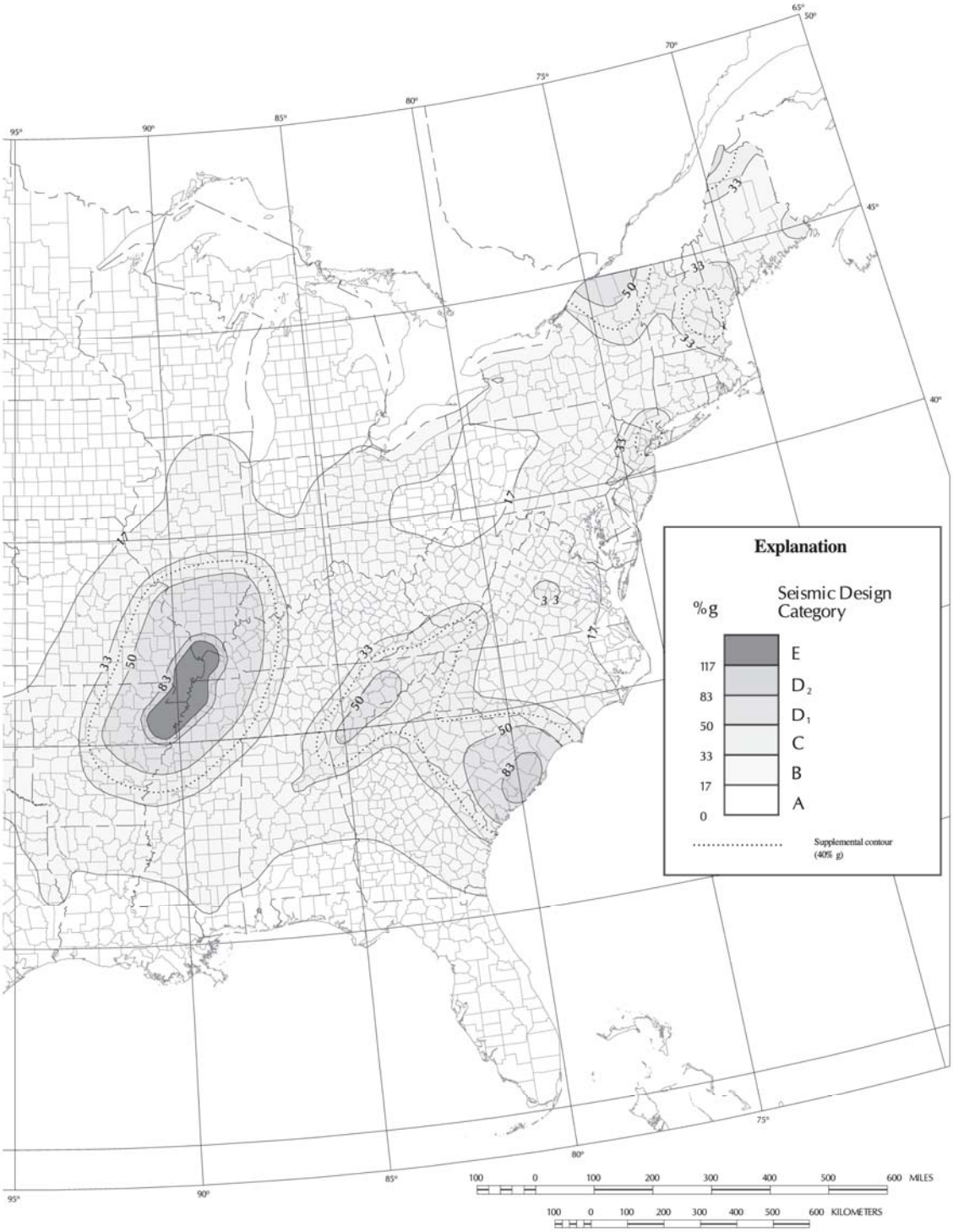

Figure 1-1 Seismic Design Categories – Site Class D (continued).

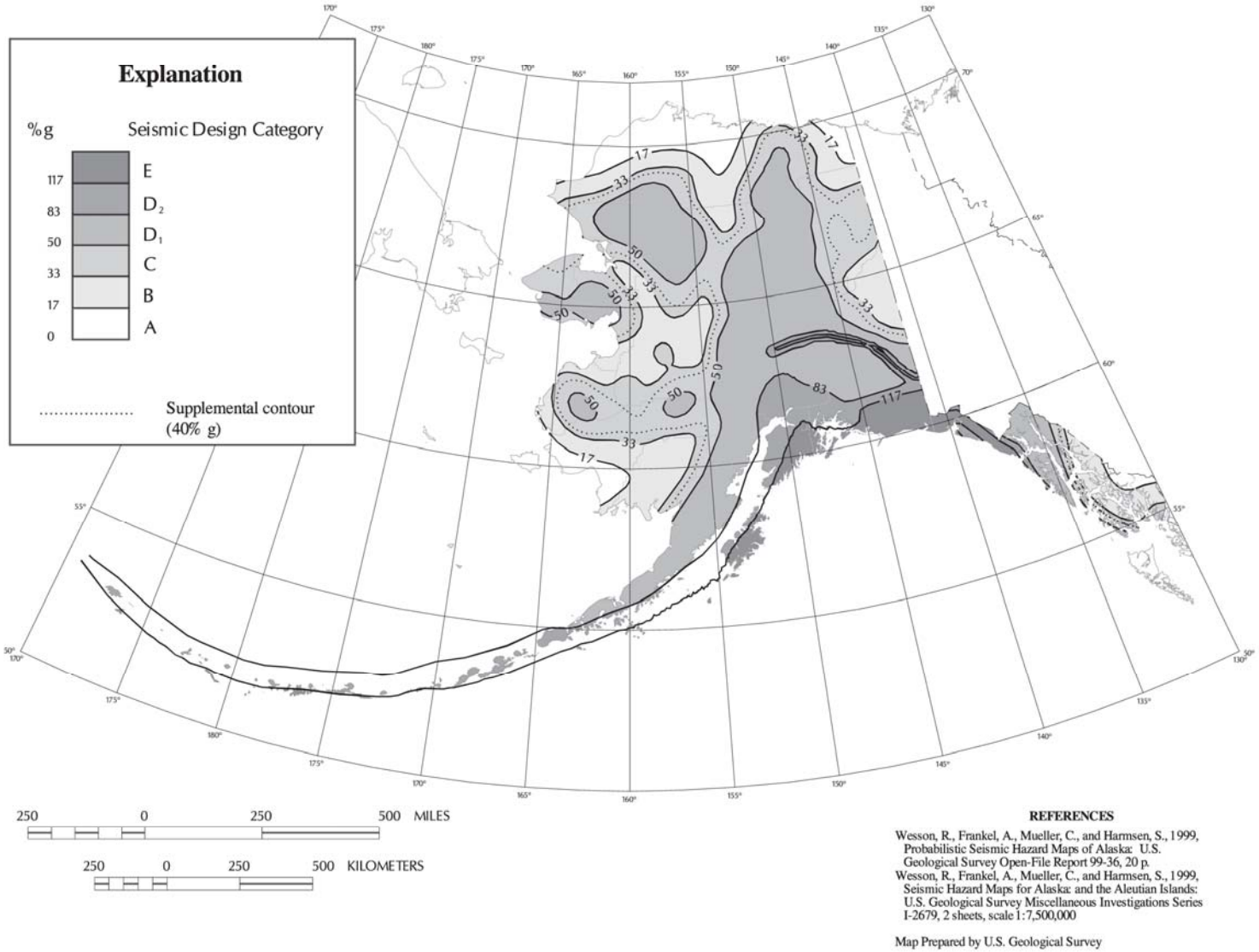

Figure 1-1 Seismic Design Categories – Site Class D (continued).

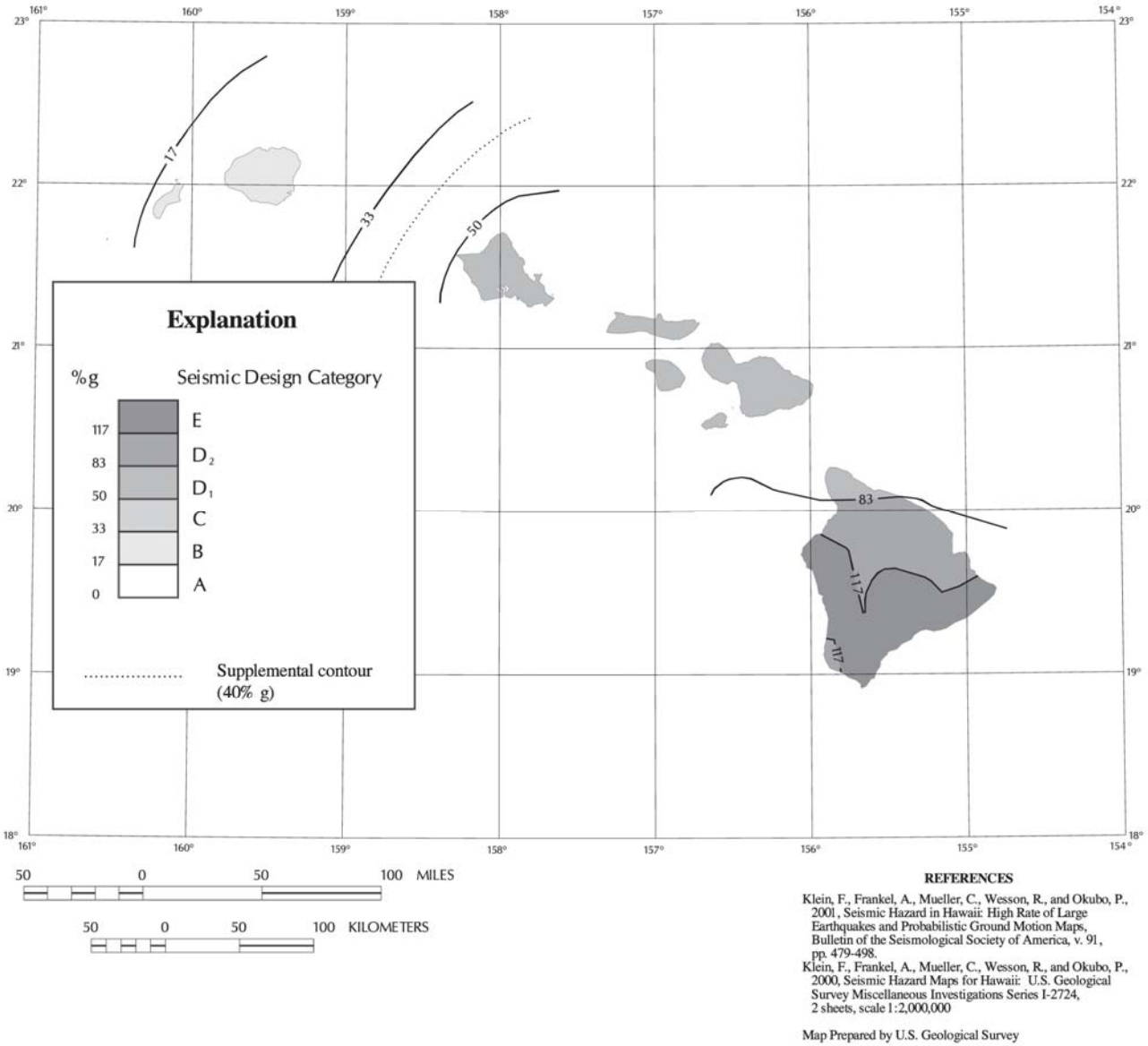

Figure 1-1 Seismic Design Categories – Site Class D (continued).

When using the seismic maps associated with the building codes, the reader should be aware that local soil conditions have a major impact on the seismic hazard for each particular site. The *IRC* map incorporates an assumed Site Class of D, which is stiff alluvial soil. If the soil conditions are different from stiff soil (e.g., bedrock or the soft alluvial soils often found in valleys), the local building department may have established special seismic requirements for these locations. Check with the local building department to determine if any such special regulations apply to a particular building site.

1.5 BUILDING RESPONSE

The series of drawings in Figure 1-2 illustrates how a house responds to earthquake ground motion. Before the earthquake occurs, the house is stationary, resisting only the vertical gravity loads associated with the weight of the house and its occupants and contents. When the ground starts to move during an earthquake, the foundation of the house moves sideways but the roof and upper stories try to remain stationary due to the inertia of the house. By the time the roof starts to move in the direction of the foundation, the foundation is already moving back towards its initial position and the roof and foundation are moving in opposite directions. This cycle repeats until the earthquake ground motion stops and the building movements slow and then stop. If the shaking has been severe enough, the house may be damaged and have a residual tilt or displacement.

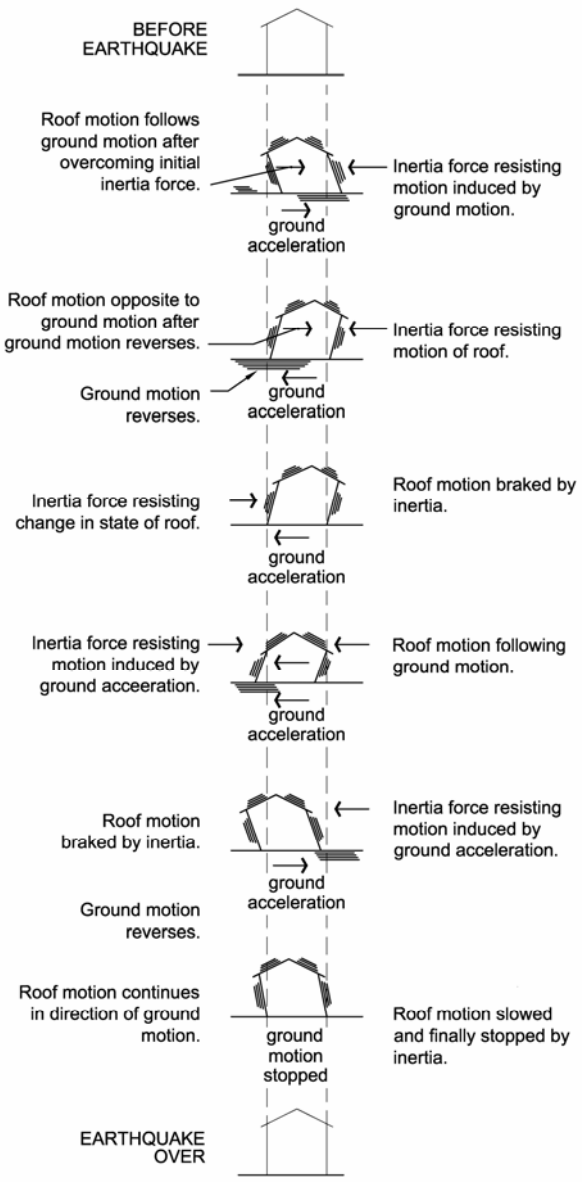

Figure 1-2 Forces induced in a house due to earthquake ground motion.

To perform adequately in an earthquake, a house must have enough strength to resist the forces generated without failure. Actual earthquakes can generate forces considerably higher than those used for code-prescribed design (Figure 1-3). Nevertheless, design for the lower code forces generally has prevented life loss and therefore satisfies the purpose of the code. Remember that

the primary goal of the building code is to prevent loss of life; the prevention of damage is only incidental. It is for this reason that this guide presents **above-code** recommendations that describe techniques intended to improve the performance of a house during an earthquake and result in less damage.

Figure 1-3 Concept of actual vs. code seismic forces.

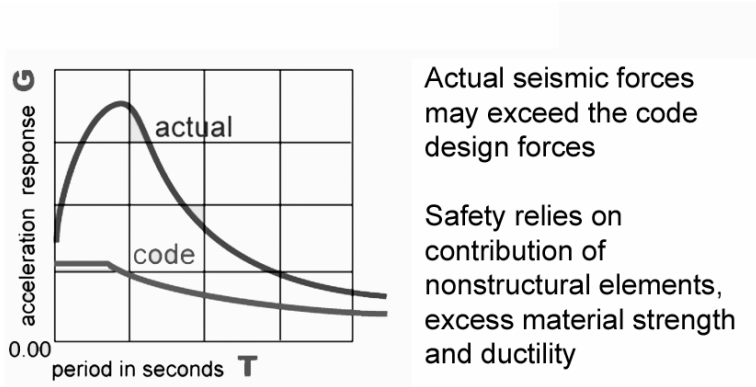

The reasons one- and two-family houses tend to perform adequately in earthquakes even when designed to the minimum code forces are because houses often are stronger than recognized in code-level design and because they often are constructed with ductile earthquake-resisting systems. In residential construction, the finish materials and nonstructural partitions often add significantly to the strength provided by required bracing materials. Houses constructed from ductile earthquake-resisting systems generally will perform well during an earthquake because they can deform without breaking. An example of ductility is given in Figure 1-4. The ductile metal spoon simply bends while the brittle plastic spoon breaks.

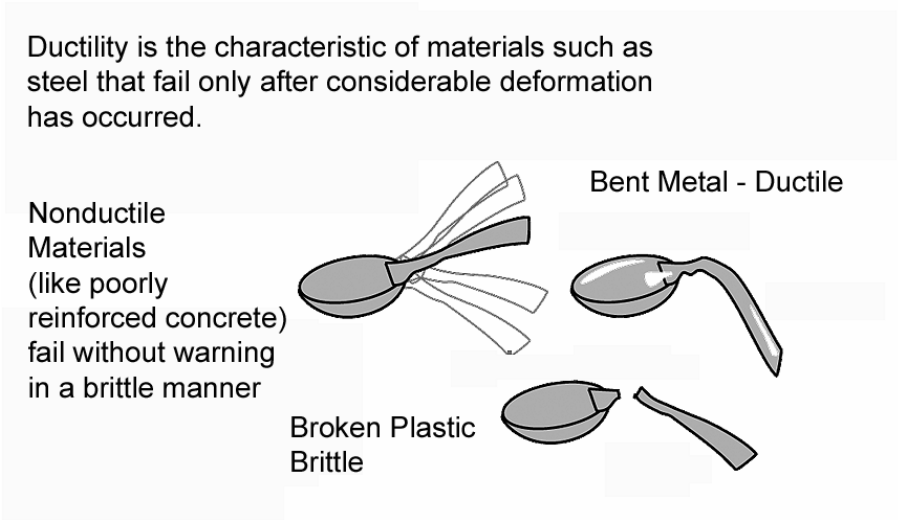

Figure 1-4 Concept of ductility.

Stiffness also is important. The stiffer the house, the less it will move or deflect during an earthquake, which will reduce the amount of damage to finish materials and, therefore, repair costs. Stiffness is measured in buildings in terms of drift (horizontal deflection) and is usually

discussed as the horizontal deflection in a particular story in terms of either the amount of drift in inches or the percent story drift, which is the deflection in inches divided by the floor to floor story heights in inches (Figure 1-5). Unfortunately, increased stiffness also generally results in increased seismic forces; therefore, the **above-code** recommendations made in this guide simultaneously increase strength and stiffness.

Figure 1-5 Definition of drift.

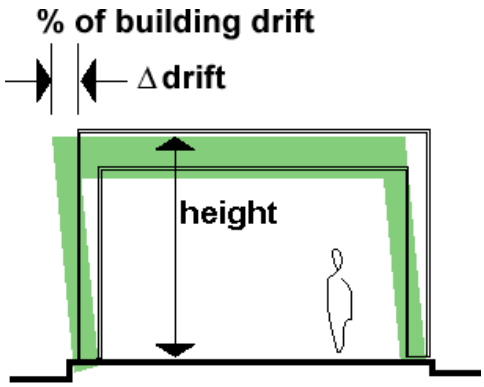

One way to understand how the strength and stiffness of a house affect its earthquake performance is to remember that the forces exerted by earthquake ground motion are resisted by a house's strength while the drift (deflection) is resisted by the house's stiffness. An analogy that can be used for this is a fishing pole. The amount the pole bends is dependent on how stiff the pole is; whether the pole breaks or not is dependent on how strong the pole is. A strong house will not fall down, but a house with relatively little stiffness will sustain considerable damage.

1.6 IMPORTANT CONCEPTS CONCERNING HOMESITE

Site characteristics also affect how a house will perform during an earthquake:

- Certain types of soil amplify earthquake ground motions;
- Some types of soil slide, liquefy, and/or settle as a result of earthquake ground motions, all of which will result in loss of vertical support for the house; and
- Fault rupture on a house site can result in both horizontal and vertical offsets of the supporting ground.

It is most desirable to build on sites with stable, solid geologic formations. Deep and unbroken rock formations, referred to as bedrock, generally will minimize earthquake damage whereas deep soft sedimentary soils will result in the maximum seismic forces and displacements being transferred to the house.

Sites located over known faults and in landslide-prone sites warrant additional attention. No matter how well designed, a house cannot accommodate earthquake ground motions at a site directly on top of an earthquake fault where the ground on either side of the fault moves in opposite directions. Check with the local building department to determine where known faults

are located. Houses should not be built within 50 feet of a known fault and, even at that distance, damage will still be significant. A house damaged by direct fault movement is shown in Figure 1-6.

Figure 1-6 A house damaged due to fault movement. The fault passed under this house near Wright's Station, on the Southern Pacific Railroad, in Santa Cruz County, California. The house was severed by fault movement during the earthquake. Photo credit: R.L. Humphrey, U.S. Geological Survey.

Sites where landslides are likely to occur also should be avoided. An example of damage due to a hillside collapsing in a landslide is shown in Figure 1-7. Engage a geotechnical or geological engineer to inspect the site and/or check with the local building department to minimize the risk of building on a landslide-prone site.

Figure 1-7 Houses damaged due to a landslide at the site.
Photo Courtesy National Information Service for Earthquake Engineering, University of California, Berkeley

1.7 MODEL HOUSE USED FOR GUIDE ANALYSIS

A typical model house is used in this guide to illustrate various concepts and techniques (Figure 1-8). An analysis of the model house identified approximate deflections under seismic loading, which permitted performance to be compared for various configurations using the minimum code requirements and the **above-code** techniques.

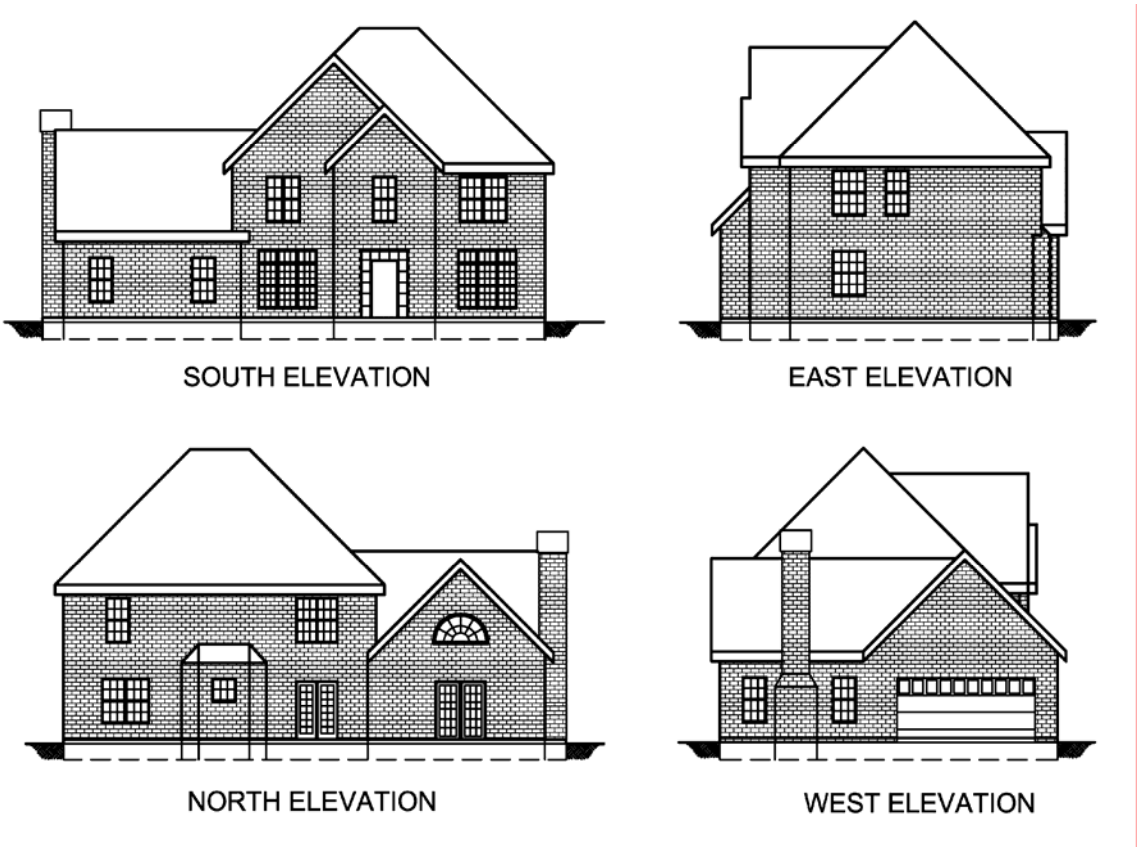

Figure 1-8 Elevations of the model house used as an example for this guide.

The floor plan of the model house is shown in Figure 1-9. *IRC*-conforming seismic bracing configurations were developed for SDCs C, D_1, and D_2. Gypsum wallboard was used to meet *IRC* seismic bracing requirements where possible because the wallboard would already be provided for wall finish. Where *IRC* bracing requirements could not be met with gypsum wallboard, wood structural panel (oriented strand board or OSB) wall bracing was added. Modifications to the basic floor plan included changing the foundation from a slab-on-grade to a crawl space (cripple wall or hillside condition) to illustrate the differences resulting from these changes.

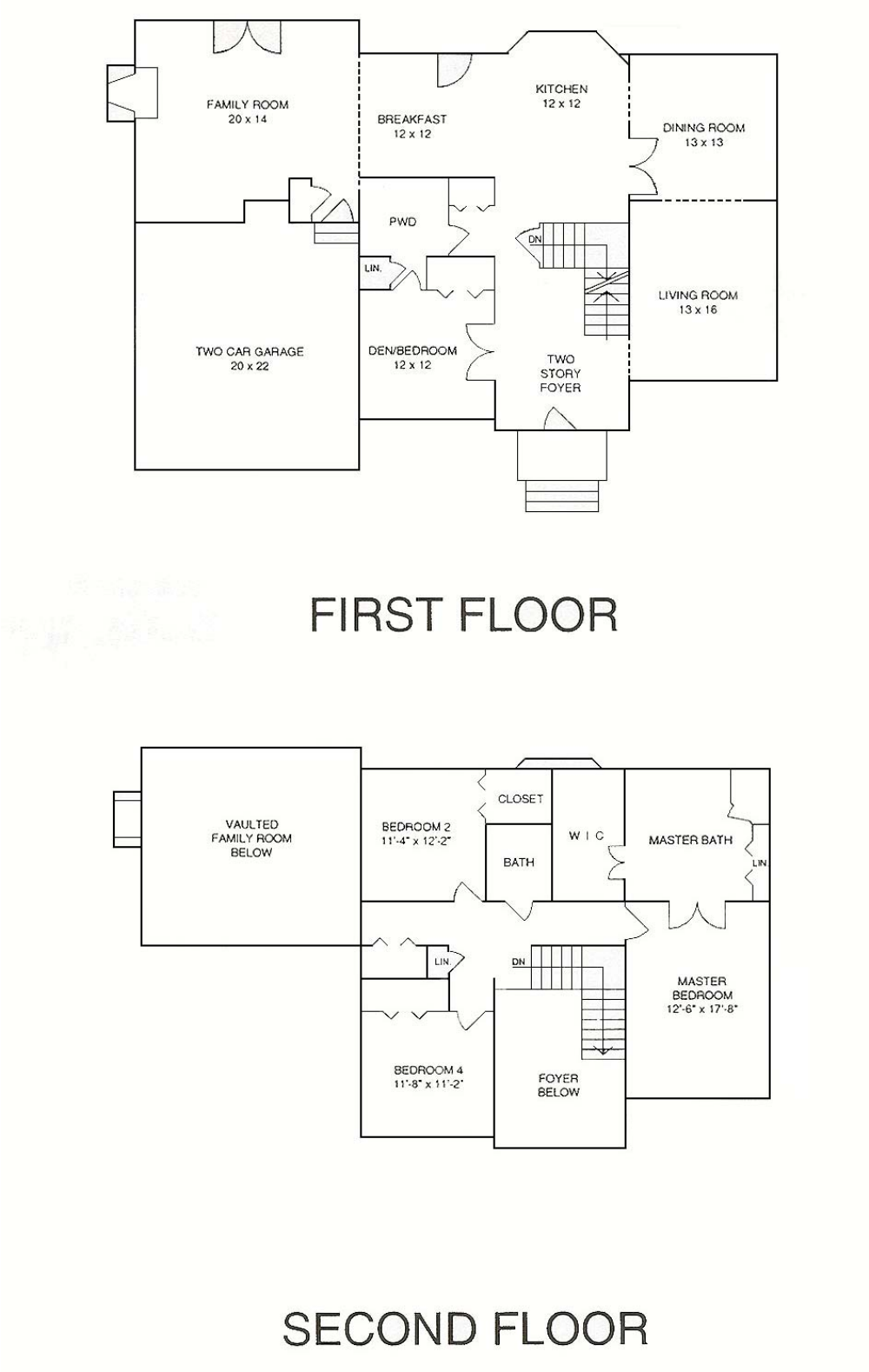

Figure 1-9 Model house floor plan.

After the basic model house construction was analyzed, the following **above-code** construction techniques were evaluated:

- A completely sheathed shear wall system in which the exterior walls were fully sheathed (around door and window openings) with OSB and hold-down devices were provided at building corners,

- A shear wall system with hold-down devices provided at each end of each OSB bracing wall, and

- An oversize sheathing panel system with each OSB sheet lapping vertically onto and edge-nailed to the rim joist at each floor level.

Approximate comparisons of the performance of the basic configuration of the model house with the **above-code** configurations were made using a two-part process. First, each house configuration was analyzed using a computer model to determine maximum drift or deformation during earthquake loading.

Second, in order to translate the analytical results into an approximation of house performance, three ranges of peak transient wall drift and assumed approximate descriptions of performance were developed. The choice of drift ranges and performance descriptions are based on component and full-building test results and the judgment of those participating in the development of this guide.

The approximate performance categories and corresponding story drift ranges are:

- **Minor** damage potential – Less than or equal to 0.5% story drift

  The house is assumed to suffer minor nonstructural damage such as cracking of plaster or gypsum wallboard and hopefully would be "green-tagged" (occupancy not limited) by inspectors after an earthquake, which would permit immediate occupancy. Some repairs should still be anticipated.

- **Moderate** damage potential – Above 0.5% to 1.5% story drift

  The house is assumed to suffer moderate damage including possible significant damage to materials and associated structural damage, but the building is assumed to have some reserve capacity in terms of strength and displacement capacity. The house hopefully would be "green-tagged" or, more likely, "yellow-tagged" (limited occupancy) by inspectors after an earthquake and may or may not be habitable. Significant repairs should be anticipated.

- **Significant** damage potential – Greater than 1.5% story drift

  The house is assumed to have significant structural and nonstructural damage that could result in its being "red-tagged" (occupancy prohibited) by inspectors after an earthquake. Significant repairs to most components of the building should be anticipated, and it may be more economical to replace the house rather than repair it.

Comparisons of performance based on this approach are discussed in a number of sections in this guide. See Appendix A for a detailed description of the analysis.

1.8 OTHER HAZARDS

Although this guide has been written primarily to address the earthquake risk to a house, homebuilders and homeowners need to be aware of many other natural hazards. These hazards can also affect how a house should be designed and constructed as well where it should be sited and even whether the site should be used at all.

1.8.1 Wind

Since wind acts on a house by imparting horizontal loads similar to those of an earthquake, the seismic design and construction criteria contained in the *IRC* and further detailed in this guide will provide a significant level of protection to a house's structural system against wind loads. However, wind loads also act on the home's cladding, walls, and roof coverings, and the wind provisions of the *IRC* should be followed carefully (due to the differences in the load path for wind versus earthquake loads). While the *IRC* wind provisions are adequate, additional guidance is available and should be considered. This guidance includes the American Forest and Paper Association (AF&PA) *Wood Frame Construction Manual* and the Southern Building Code Congress International (SBCCI) *Standard for Hurricane-Resistant Residential Construction* (SSTD 10).

1.8.2 Flooding

Care should be taken to ensure that the home site is not in a flood hazard area. If there is any doubt in this regard, the local building code enforcement or floodplain management office should be consulted. As part of the National Flood Insurance Program (NFIP), FEMA publishes local flood hazard maps that delineate the extent of the flood hazard, using the Base Flood Elevation or BFE, which is flood elevation that has a 1 percent chance of occurring in any given year. As part of its agreement to participate in the NFIP in order to make federally-backed flood insurance available to its residents, a community adopts and enforces a series of flood design and construction requirements. Generally, these requirements mean that a home located in a flood hazard area must have its lowest floor and utilities elevated to or above the BFE.

FEMA has available a series of publications on protecting homes from flood damage. Some of these publications are:

- *Design Guidelines for Flood Damage Reduction* (FEMA 15)
- *Elevated Residential Structures* (FEMA 54)
- *Above the Flood: Elevating Your Flood-prone House* (FEMA 347)

For flood protection of existing houses, the reader is referred to *Homeowner's Guide to Retrofitting: Six Ways to Protect Your House from Flooding* (FEMA 312). All of the above publications are available from the FEMA Publications Center at 1-800-480-2520. Additional information is also available online at www.fema.gov.

For guidance on the flood resistant construction provisions of the *IRC*, the reader is referred to the document *Reducing Flood Losses Through the International Codes: Meeting the Requirements of the National Flood Insurance Program*. This publication is available online at www.fema.gov as well as for a modest fee from the International Code Council (www.iccsafe.org) at (800) 786-4452.

Above-code Recommendations: If a house is to be located in a flood hazard area and must be elevated to the BFE, it is recommended that the lowest floor of the house actually be elevated 2 or 3 feet above the BFE. This will result in a significantly lower insurance premium for the homeowner and will provide a significantly higher level of protection for a minimal additional cost.

If a house is to be located just outside of a flood hazard area and is not required to meet a community's flood regulations, it is recommended that the home still meet the community's flood ordinances, such as not using a basement foundation, to provide an additional level of protection. Further, the homeowner is still encouraged to purchase flood insurance. Even if a home is just outside of a flood hazard area, it can still be subject to flooding as higher floods than the design flood can and have occurred. As a further measure of protection, flood insurance is available outside of the flood hazard area, usually for a very reasonable premium.

1.8.3 Coastal Hazards

Homesites along the coast are subject to two different hazards from hurricanes and other coastal storms such as Northeasters — high winds and flooding from storm surge. Storm surge is caused by the storm's low pressure and winds pushing the water onto land. In the recent Hurricane Katrina, storm surge heights of almost 30 feet were measured along the coast of Mississippi. Coastal flood hazard maps similar to the flood maps described above are prepared by FEMA; however, the coastal flood hazard area is divided into two zones, the coastal high hazard zone or "V-Zone" which has significant wave heights and the regular flood hazard zone or "A-Zone" which does not.

Coastal homes must be designed and built to withstand both wind and storm surge loads. This requires elevating the house above mapped storm surge elevations and ensuring that the house can resist the loads associated with hurricane force winds. Further, since storm surge waters can flow with considerable velocity which generates substantial hydrodynamic loads on the area below the elevated floor, this area must be built to allow water to flow through without placing additional loads on the structure. For this reason, any walls below the lowest floor must be made of "breakaway" construction.

Note also that the coastline is a dynamic and ever-changing environment and is often subject to erosion. In choosing a home site, consider whether the property is subject to erosion, which could easily undermine and destroy the house in a relatively short period of time. Erosion maps showing the rate of change of the shoreline may be available locally.

Above-code Recommendations: For additional protection of coastal homes, the following is recommended:

- **Houses should be elevated 2 or 3 feet above the storm surge flood elevation provided on local maps.**
- **The area below the lowest floor should be kept open and free of as many obstructions as possible.**
- **Houses located in A-Zones but still near the coast (also known as Coastal A-Zones) may still be subject to waves and storm surge and should be constructed to V-Zone criteria.**
- **Houses should be designed to resist damage from wind and debris. This includes limiting the size and amount of glazing and actually installing the storm shutters before an event.**
- **Building sites should be investigated for erosion potential prior to purchase and sites subject to erosion should be avoided. Houses built where erosion is possible should be located as far from the shoreline as possible.**
- **Natural features such a sand dunes and vegetation should be used as much as possible to protect houses from coastal forces.**

All of the above recommendations will provide better protection than currently offered by the *IRC* with little additional cost.

The reader is encouraged to consult the *FEMA Home Builders Guide to Coastal Construction: Technical Fact Sheet Series* (FEMA 499). These fact sheets contain design and construction suggestions based on lessons learned in FEMA's investigations of past hurricanes and how they impacted residential construction. This document is available from the FEMA Publications

Center as well as online at www.fema.gov. For more detailed engineering design information, the reader may wish to consult the *Coastal Construction Manual: Principles and Practices of Planning, Siting, Designing, Constructing, and Maintaining Residential Buildings in Coastal Areas* (FEMA 55). This is a large document (500 pages) and is available from the FEMA Publications Center in paper or on a CD-ROM.

1.8.4 Tornado

Building codes generally do not contain tornado provisions primarily because the probability of a specific house being hit by a tornado powerful enough to do damage are sufficiently remote that it is not thought to be economically justifiable to design for one. Therefore, further guidance on resisting the loads from a tornado does not exist. If protection of a home's occupants is a concern, the reader is referred to *Taking Shelter from the Storm: Building a Safe Room Inside Your House* (FEMA 320). This document is available from the FEMA Publications Center as well as online at www.fema.gov.

Chapter 2
EARTHQUAKE-RESISTANCE REQUIREMENTS

This chapter explains the *International Residential Code*'s (*IRC's*) general earthquake-resistance requirements as well as specific *IRC* requirements concerning load path and house configuration irregularities. One- and two-family detached houses of wood light-frame construction are addressed; however, the discussion is relevant to other materials of construction likely to be used for detached houses including light-frame cold-formed steel.

2.1 *IRC* GENERAL EARTHQUAKE LIMITATIONS

The variety of configurations used for houses is very wide and they are constructed of an equally wide variety of materials. *IRC* Section R301.2.2 imposes some limits on configuration and materials of construction for one- and two-family detached houses in Seismic Design Categories (SDCs) D_1 and D_2. These *IRC* limitations reflect the desire to provide equal earthquake performance for houses designed using the prescriptive *IRC* provisions and for those with an engineered design. Application of the prescriptive *IRC* requirements to houses that do not comply with the limitations can be expected to result in inadequate performance.

IRC Section R301.2.2 earthquake limitations do not apply to one- and two-family detached houses in SDCs A, B, and C; however, townhouses in SDC C are required to comply. In general, design using the *IRC* is prohibited in SDC E, and the designer is referred to the engineered design requirements of the *International Building Code* (*IBC)* or other adopted code. There are, however, two methods by which houses designated as SDC E in *IRC* Figure R301.2(2) may be designed in accordance with *IRC* provisions: (1) if site soil conditions are known, *IRC* Section R301.2.2.1.1 permits determination of the Seismic Design Category in accordance with the *IBC*, which may result in a reduced SDC, and (2) if the restrictions of *IRC* Section R301.2.2.1.2 are met, houses located in SDC E may be reclassified to SDC D_2 and designed using the *IRC* provisions. *IRC* Section R301.2.2.1.2 requirements dictate a regular house configuration.

The limitations imposed by *IRC* Section R301.2.2 are as follows:

- *Weight Limitations* – For houses in SDCs D_1 and D_2, *IRC* Section R301.2.2.2.1 specifies maximum weights for the floor, roof-ceiling, and wall assemblies or systems. Because earthquake loads are proportional to the weight of the house, an upper bound on assembly weight provides an upper bound on earthquake loads. The specified maximum assembly weights relate directly to the weights considered in developing the *IRC* earthquake bracing provisions. The effect of the maximum weights is the exclusion of heavier finish materials when using the *IRC* provisions. Where heavier finish materials are to be used, an engineered design must be provided.

- *House Configuration Limitations* – For houses in SDCs D_1 and D_2, *IRC* Section R301.2.2.2.2 places limits on house configuration irregularities. These limits are discussed in detail in Section 2.3 of this guide.

- *House System Limitations* – Another scope limitation for houses in SDCs D_1 and D_2 is given in the combined requirements of *IRC* Sections R301.2.2.3 and R301.2.2.4. These sections provide limits for number of stories based on building system and limits for anchored stone and masonry veneer and masonry and concrete wall construction. Some of these requirements are addressed in Chapter 5 of this guide.

- *Story Height Limitation – IRC* Section R301.3 provides a scope limitation that is not related solely to earthquake loads but rather applies in all SDCs. This section limits story height by limiting the wall clear height and the height of the floor assembly. This limits both the lateral earthquake and wind loads and the resulting overturning loads.

The *IRC* requires design in accordance with accepted engineering practice when the general earthquake limitations discussed above are not met (weight limitations, house configuration limitations, building system limitations, and story height limitations). Engineered design is addressed in Section R301.1.3. This section permits design to be limited to just the elements that do not conform to the *IRC* limitations. Increased assembly weight and story height will globally increase seismic and wind loads, generally making engineered design of the entire house necessary. Design of portions of the house is particularly applicable when an irregularity such as a cantilever, setback, or open front occurs. The extent of design is left to the judgment of the designer and building code official. When multiple irregularities occur, engineered design of the entire house may become necessary in order to provide adequate performance. The *IRC* requires that engineering design methods be used but does not specify whether this must be done by a registered design professional. State or local law governs who can perform the design; the reader is advised to check with the local building department for requirements.

2.2 LOAD PATH

For a house to remain stable, a load applied at any point on the structure must have a path allowing load transfer through each building part down to the building foundation and supporting soils. The term "load path" is used to describe this transfer of load through the building systems (floors, roof-ceilings, bracing walls).

Basic Concept — To understand the concept of a load path, a house can be represented by the chain shown in Figure 2-1. The chain is pulled at the top and the load is transferred from one link to the next until it is transferred to the ground. If any link is weak or missing, the chain will not adequately transfer the load to the ground and failure will result.

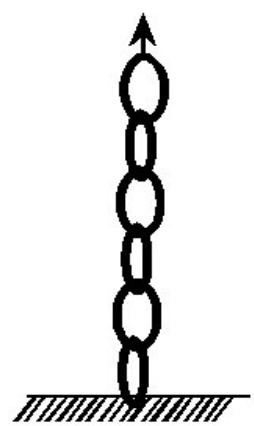

Figure 2-1 Chain illustrating the load path concept.

Likewise, houses must have complete and adequate load paths to successfully transfer earthquake loads and other imposed loads to the supporting soils.

Load Path for Earthquake and Wind Loads — The example house in Figure 2-2 will be used to discuss load path. The arrows provide a simplified depiction of earthquake or wind loads pushing horizontally on the house. Although wind and earthquake loads can occur in any horizontal direction, design procedures generally apply the loads in each of the two principal building directions (i.e., longitudinal and transverse), one at a time, and this discussion of loading will utilize that convention.

Internally, the house has to convey loads from the upper portions of the structure to the foundation. For the example house, this is accomplished by transferring the loads through:

- The roof-ceiling system and its connections to the second-story bracing wall system,
- The second-story bracing wall system and its connections to the floor-ceiling system,
- The floor-ceiling system and its connections to the first-floor bracing wall system, and
- The first-story bracing wall system and its connections to the foundation, and
- The foundation to the supporting soil.

The following discussion focuses primarily on the connections between the various building systems; the systems themselves are addressed only briefly here but are discussed in detail in later chapters of this guide.

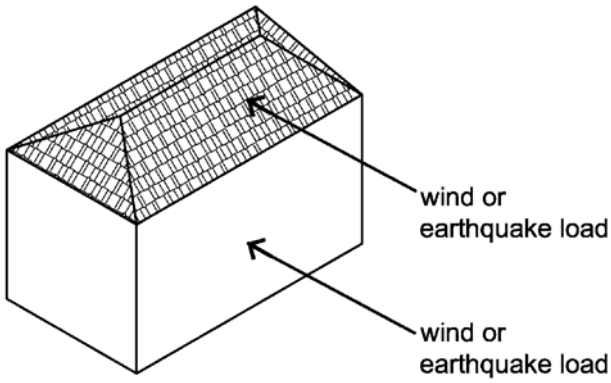

Figure 2-2 Lateral loads induced in a building due to wind or earthquakes.

Roof-ceiling and Floor Systems — In the example house, the roof-ceiling system will resist horizontal earthquake loads proportional to the weight of the roof, ceiling, and top half of the second-story walls. The series of arrows at the right of Figure 2-3a depicts this load. The roof-ceiling system deflects horizontally under the load and transfers the load to the supporting walls at both ends. The single arrows at the roof-ceiling system ends depict the reaction loads to the supporting walls. Within the roof-ceiling system, the load is carried primarily by the roof sheathing and its fastening (see Chapter 6 of this guide for discussion of roof-ceiling systems).

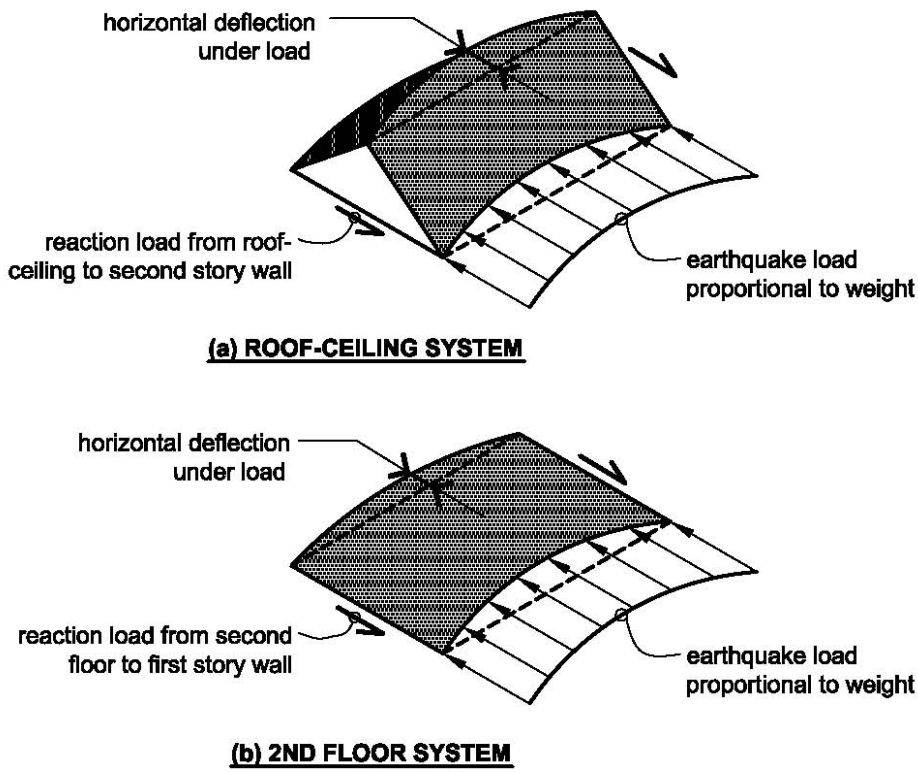

Figure 2-3 Loading and deflection of roof-ceiling and floor systems.

Similarly, the floor system will resist horizontal earthquake loads proportional to its weight and the weight of walls above and below. As shown in Figure 2-4b, it will deflect and transfer load to the supporting walls in much the same way as the roof-ceiling system. Again, the loading is carried by the floor sheathing and its fastening (see Chapter 4 of this guide for discussion of floor systems).

Bracing Wall Systems – The roof-ceiling reaction load is transferred into the second-story bracing wall system as depicted by the arrow at the top of the wall in Figure 2-4a. The wall deflects under this load and transmits the load to the wall base and through the floor system to the first-story wall. Resistance to the wall load is provided by the wall sheathing and its fastening.

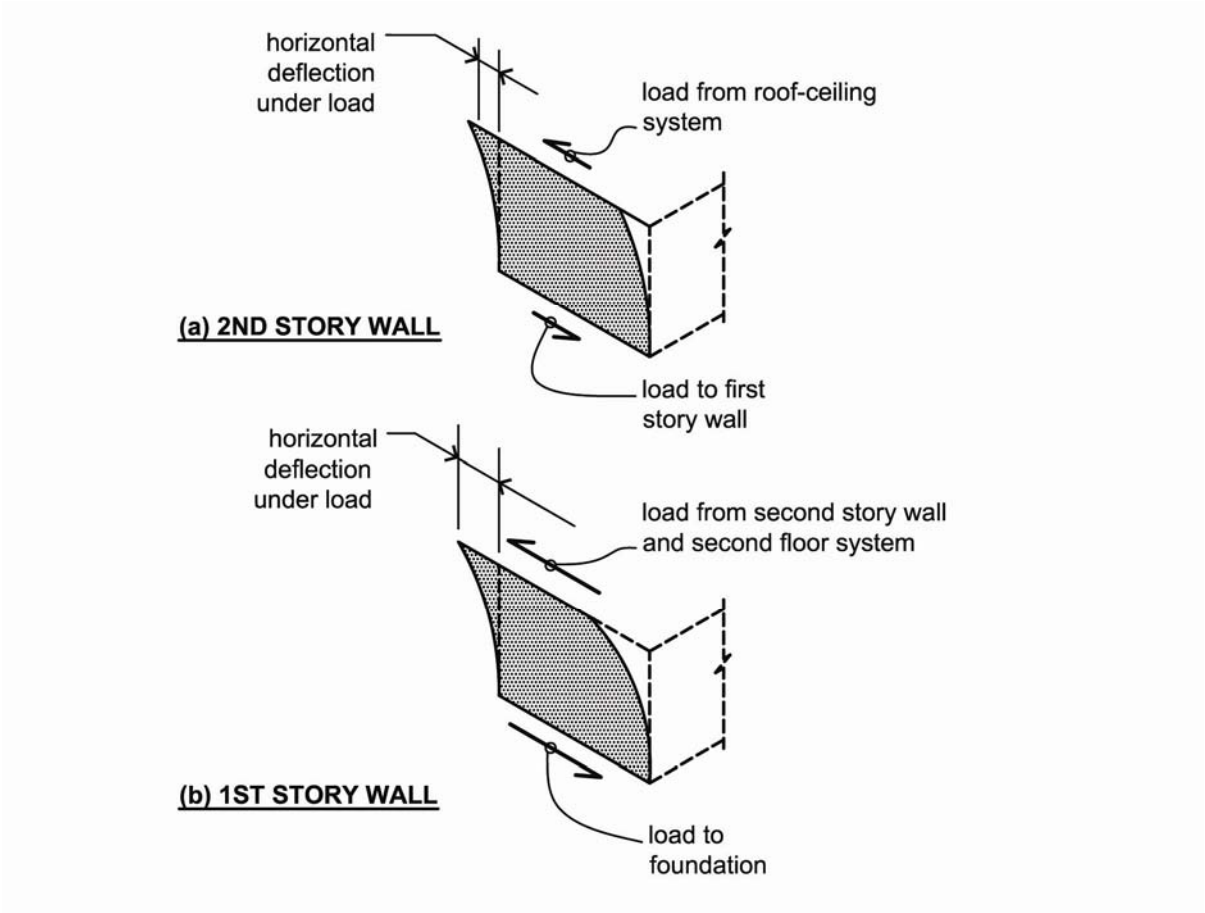

Figure 2-4 Loading and deflection of bracing wall systems.

The first-story bracing wall system resists loads from both the second-story wall and the second-story floor system as depicted by the arrow at the top of the wall in Figure 2-4b. The wall deflects under this load and transmits the load to the wall base and the foundation. Again, resistance to the wall load is provided by sheathing and its fastening. Figure 2-5 provides an exploded view of the example house that illustrates the combination of roof-ceiling, floor, and wall systems and their connection to the foundation below.

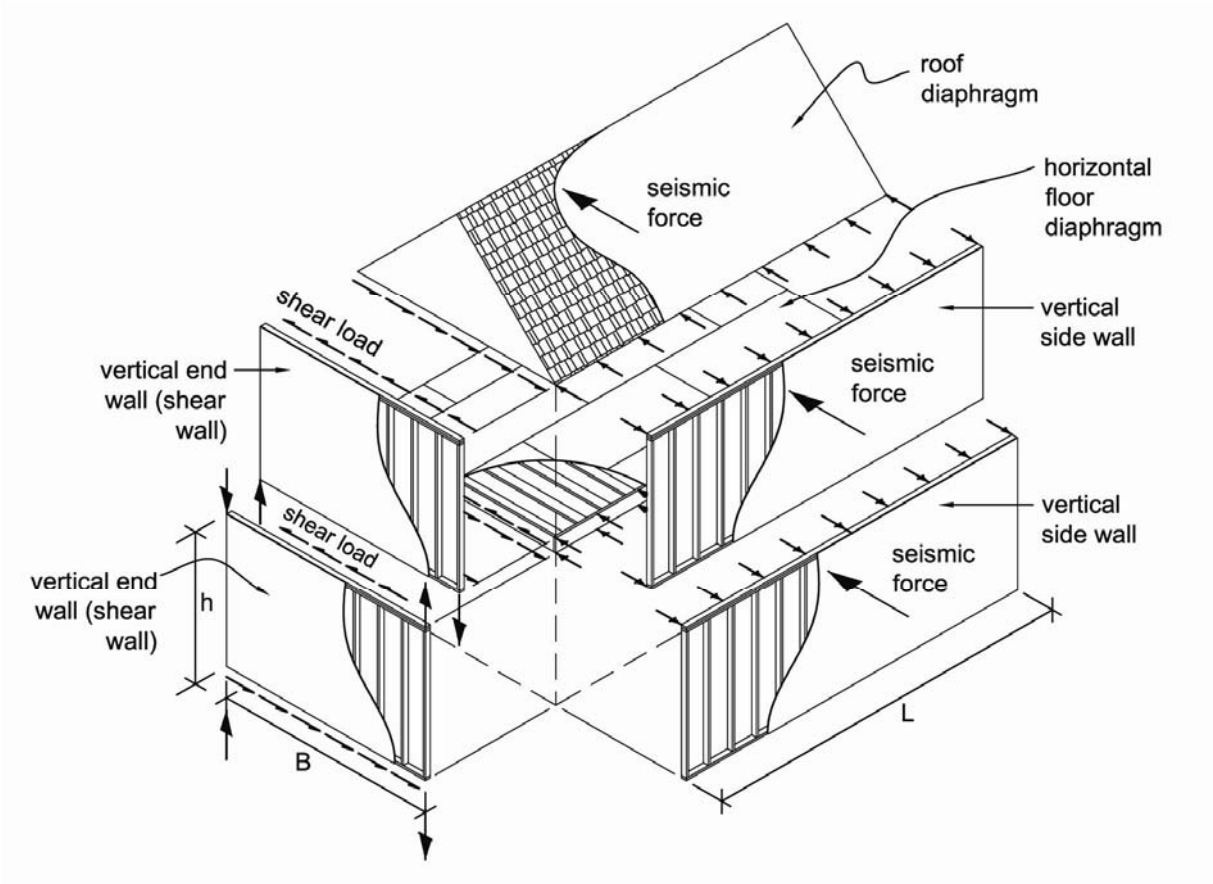

Figure 2-5 Load transfer between components in a building.

Requirements for Connections Between Systems – As previously noted, a complete load path for earthquake loads requires not only adequate roof-ceiling, floor, and bracing wall systems but also adequate connection between these systems. Connections between systems must resist two primary types of loads: horizontal sliding loads and overturning loads.

Load Path Connection for Horizontal Sliding – Figure 2-6 depicts the end wall at the left side of the house illustrated in Figures 2-2 through 2-5 and provides a detailed illustration of one possible path for horizontal loads from the roof assembly to the foundation. The left-hand portion of the figure shows a section through the end wall in which each of the "links" in the load path is given a number, H1 through H11, corresponding to a connection or mechanism used to transfer the loads. The right-hand side of the figure shows an elevation of the same wall and illustrates the deformation that will occur if adequate connection is not made. Table 2-1 at the end of this chapter provides a detailed summary of the load path connections for the Figure 2-6 wall.

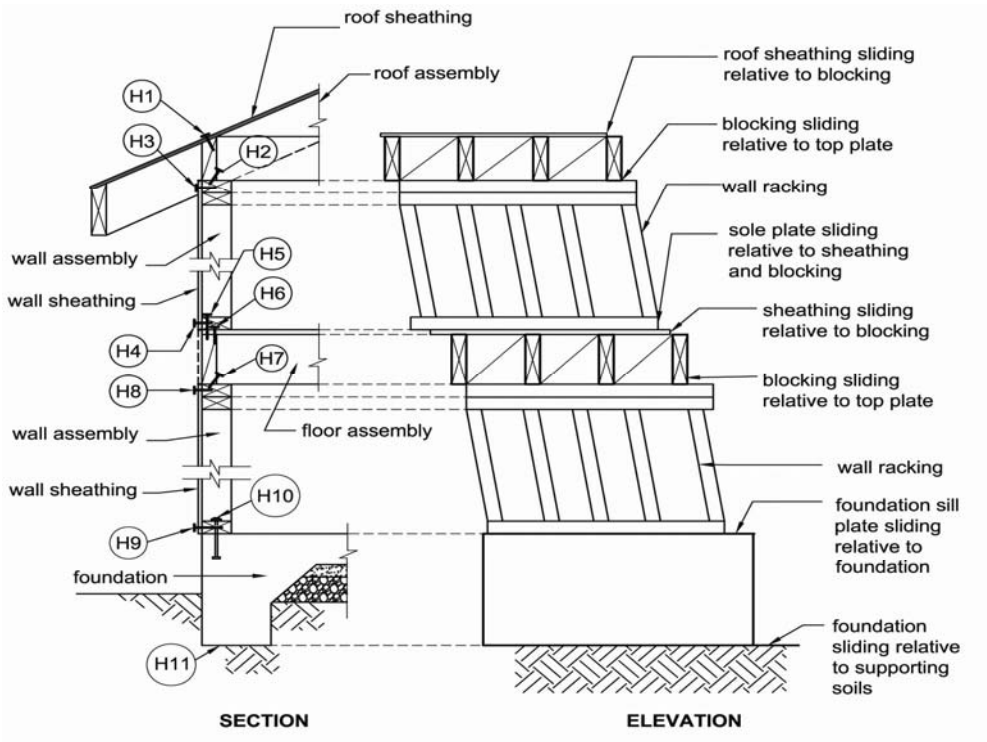

Figure 2-6 Horizontal load path connections and deformations.

Load Path Connection for Overturning – Because the horizontal loads are applied high on the house and resisted at the foundation, overturning loads develop in the bracing walls. Figure 2-7 illustrates one possible load path for overturning loads. The left-hand side of the figure shows a wall elevation in which each of the "links" in the overturning load path is given a number, OV1 to OV8, corresponding to locations with uplift or downward loads due to overturning. The right-hand side of the diagram shows an elevation of the same wall that illustrates overturning deformations that will occur with earthquake loading from the left to the right. Uplift or tension occurs at one end of a wall simultaneously with downward force or compression at the other end.

The *IRC* only specifies connections (hold-down straps or brackets) to resist overturning loads for a limited number of bracing alternatives. The connectors used to resist horizontal loads in most *IRC* designs will be required to resist overturning loads as well as horizontal loads. This is a major difference between prescriptive design and engineered design in which resistance to overturning loads must be explicitly provided. The *IRC* requires use of hold-down devices in Section R602.10.6 for alternative braced wall panels; in Section R602.10.11, Exception 2, for SDCs D_1 and D_2 when braced wall panels are not located at the end of braced wall lines; and in Section R703.7 when stone or masonry veneer is used. Table 2-2 at the end of this chapter provides a detailed summary of the load path connections for the Figure 2-7 wall.

Figure 2-7 graphically depicts use of straps to resist overturning loads; however, overturning can be resisted by connections employing such other devices as bolts, nails, or hold-down brackets. Because different device types may deform differently under load, it is preferable to use the same type of device for an entire story level. Variations in connector type from story to story are acceptable. When considering overturning in an engineered design, it is customary to include the effect of dead load (the actual weight of the house) in reducing uplift and overturning loads; however, this level of calculation detail is beyond the scope of the *IRC* provisions. Hold-downs should be provided wherever they are required by the *IRC* or recommended by this guide, irrespective of dead load.

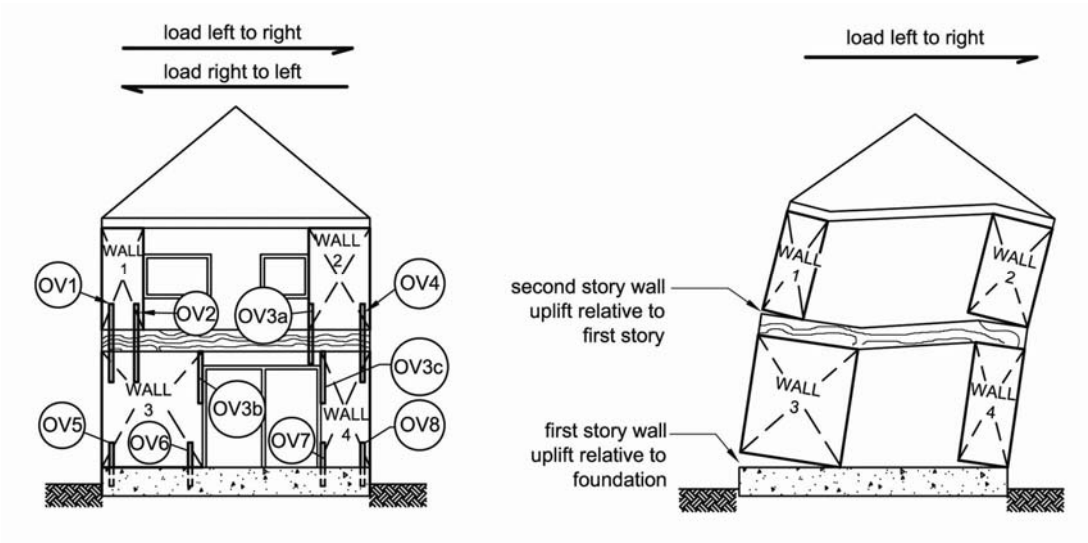

Figure 2-7 Overturning load path connections and deformations.

System and Connection Strength and Stiffness Requirements – The roof-ceiling, floor, and bracing wall systems are the basic members resisting earthquake loads. Adequate earthquake performance of a house relies on:

- Adequate strength of roof-ceiling, floor, and bracing wall systems,
- Adequate stiffness of roof-ceiling, floor, and bracing wall systems to limit deformation,
- Adequate connection between systems to provide a functional load path, and
- Adequate connection to the foundation.

For most houses, it is generally anticipated that bracing wall system behavior will have more influence on the behavior of the house than the roof-ceiling or floor systems. Further, it is anticipated that wall behavior at lower stories will generally be more critical than at upper stories due to larger earthquake loads.

Accumulation of Loads in Systems and Connections – Wind and earthquake loads increase or accumulate towards the bottom of the house. This is particularly applicable to loads in the bracing wall systems and their connections for horizontal loads and uplift and downward loads

due to wall overturning. For example, overturning connections must be sized to resist all of the loads generated above the connection location. In a two-story house, the second-floor uplift connection, such as OV1 in Figure 2-7, will need to resist loads from the second story. The first-story uplift connection, such as OV5 in Figure 2-7, will have to resist the uplift loads from the second story plus the additional uplift from the first story. It can generally be expected that OV5 will need to resist a load two to three times that resisted by OV1. Downward loads at the opposite ends of walls and horizontal loads accumulate similarly. Although this accumulation of load often is missed in design for wind and earthquake loads, it is important and should be explicitly considered when connections are being selected.

Above-code Recommendation: For overturning loads, the use of hold-down connectors (brackets, straps, etc.) is recommended as an above-code measure in order to improve load transfer and thereby decrease damage. For most of the basic *IRC* wall bracing types, the provisions rely on building weight and the fasteners resisting horizontal loads to also resist overturning. Wall component testing, however, indicates that this method is not as reliable in resisting overturning as the use of positive anchorage devices.

2.3 HOUSE CONFIGURATION IRREGULARITIES

A house's configuration (shape) significantly affects its response to wind and earthquake loads. This section discusses the concepts and the *IRC* provisions for irregular house configurations.

Ideal Earthquake-Resistant House Configuration – For earthquake resistance, the ideal house would have:

- A simple rectangular shape,
- Bracing walls distributed uniformly and symmetrically through the house,
- No large concentrations of weight,
- Bracing walls at upper stories located immediately above walls in stories below,
- Wall bracing lengths that increase in lower story levels compared to the story above,
- No split-levels or other floor level offsets.

A version of this ideal house is shown in Figure 2-8. This ideal configuration results in loads and deformations being uniformly distributed throughout the house, which permits resisting elements to contribute equally to earthquake resistance. With good distribution of bracing walls, earthquake loads can be resisted very close to where they are generated (by house weight), which reduces the need for transfer of earthquake loads through floor and roof systems to other portions of the house. This helps reduce the poor performance that often results when such transfers are required.

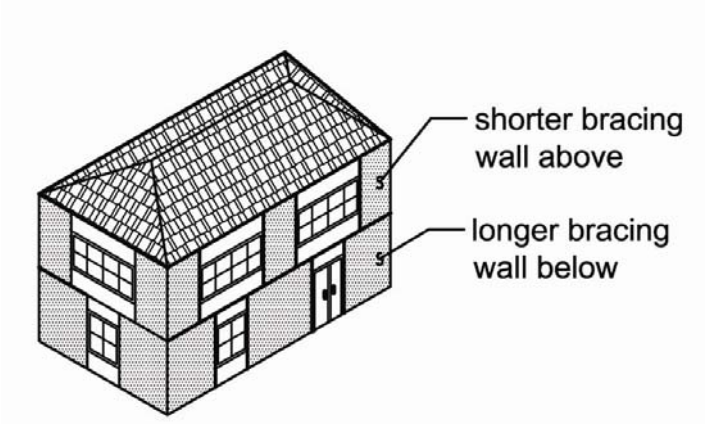

Figure 2-8 Ideal building configuration for earthquake resistance.

Deviations from Ideal Configuration – Deviations from the ideal configuration are called configuration irregularities. As houses deviate from the ideal configuration, loads and deformations are concentrated, which causes localized damage that can result in premature local or even complete failure of the house. While the ideal configuration is attractive from the standpoint of earthquake resistance, houses with irregularities are much more popular and common than those without. Large open great rooms and walls of nothing but windows are examples of typical irregular configurations.

House Irregularity Concepts – House irregularities often are divided into two types: plan irregularities and vertical irregularities.

Plan irregularities concentrate earthquake load and deformation in a particular area of a house. A common cause is a center of mass (building weight) at a location different from the center of the resisting elements (bracing walls). This can be due to non-uniform mass distribution, non-uniform distribution of bracing walls, or an irregular house plan. Two common examples are a house with one exterior wall completely filled with windows with no wall bracing provided (Figure 2-9) and a house with a large masonry chimney at one end. Houses with plan irregularities generally experience rotation in addition to the expected horizontal deformation. House rotation, as illustrated in Figure 2-10, magnifies the displacements, resulting in increased damage.

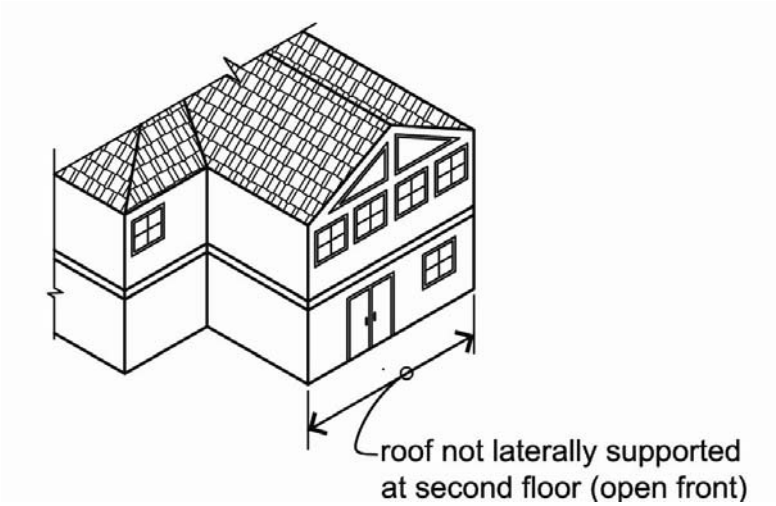

Figure 2-9 Irregular building configuration with open front (no second-story bracing walls supporting roof on right-hand portion).

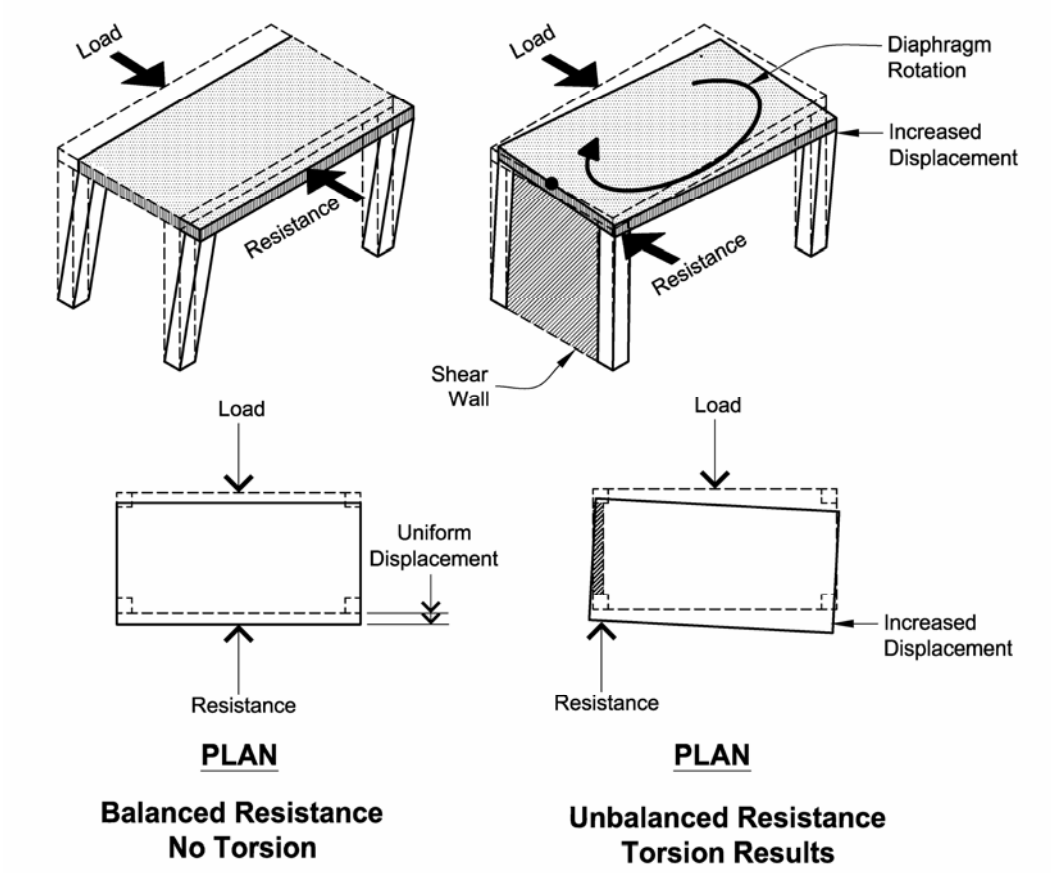

Figure 2-10 Rotational response and resistance to torsion.

Other common plan irregularities occur in T- and L-shaped houses that concentrate loads at the corners where the different wings of the house connect. Figure 2-11 illustrates the concentration of loads in an L-shaped house. The noted location of load concentration is where damage would be anticipated. Adequate interconnection of the house wings is required for good performance. Figure 2-12 illustrates damage due to inadequate interconnections. Without additional consideration, poor performance and additional damage or failure would be expected for structures with such plan irregularities.

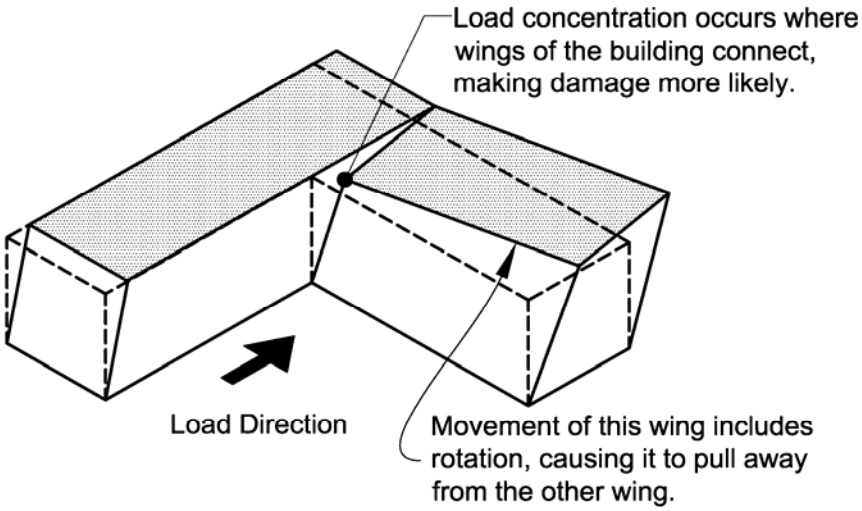

Figure 2-11 Concentration of loads and possible damage and failure due to irregular plan.

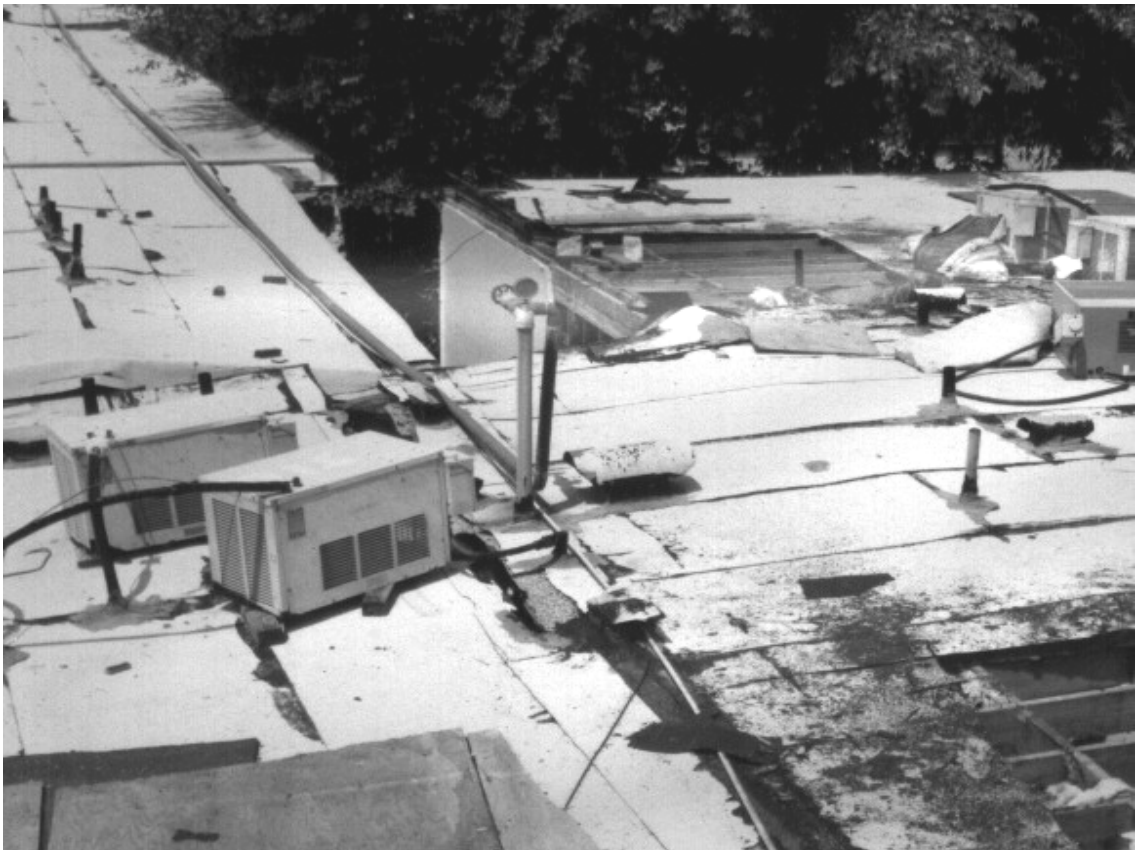

Figure 2-12 Roof-level damage to building with a T-shaped plan. The damage at the roof corner (right-hand side) is due to stress concentrations where the wings of the building connect.

Vertical Irregularities **–** Vertical irregularities concentrate damage in one story of a multistory house. This occurs when the stiffness or strength of any one story is significantly lower than that of adjacent stories. When the stiffness of a story is significantly lower, the deformations associated with the earthquake loads tend to be concentrated at that "soft" story as illustrated in Figure 2-13. The configuration on the left (normal) provides a uniform stiffness in each story, while the configuration in the middle illustrates a soft story with the deflections being concentrated in that story. If the displacements get large enough, they can cause complete failure of the soft story as illustrated in the configuration on the right.

The CUREE-Caltech Woodframe Project found that many two-story light-frame residential houses exhibit soft-story behavior to some extent because the first stories feature relatively large window and door openings and fewer partitions (less bracing) than the second stories where the bedrooms and bathrooms are located. Soft first-story behavior also was observed in the analysis of the model house used for this guide. Figure 2-14 provides an exaggerated illustration of deformation concentrated in the first story of the model house. Cripple walls around the perimeter of a crawlspace also can result in soft-story behavior. A weak story can cause damage or failure to be concentrated in that story if earthquake loading approaches the story strength.

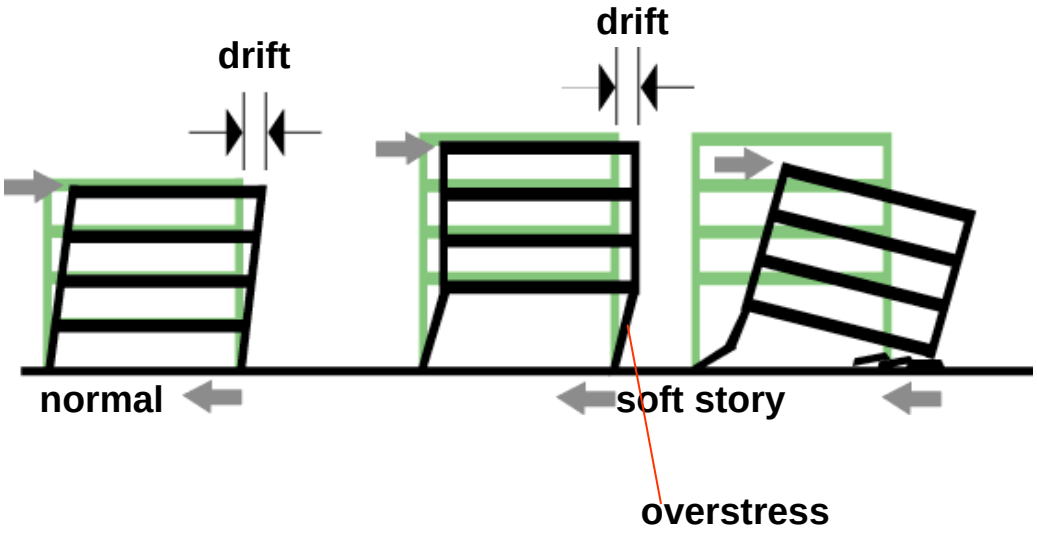

Figure 2-13 Deformation pattern due to soft-story behavior. Deformation is concentrated in the first story.

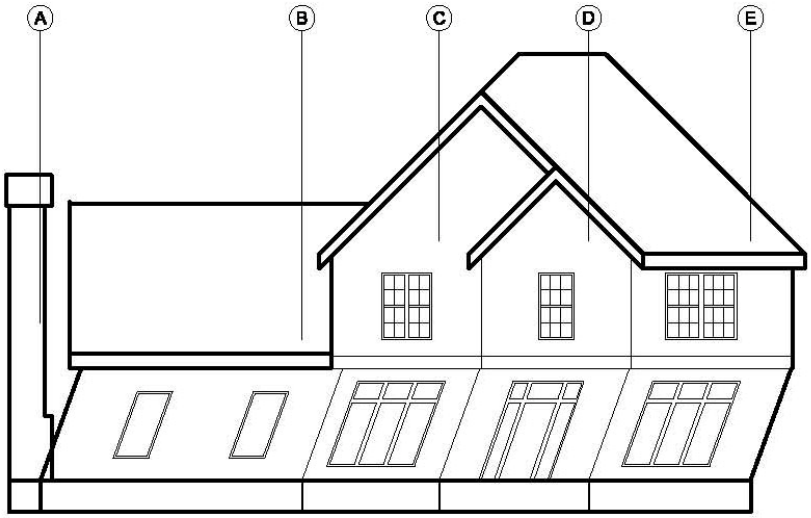

Figure 2-14 Change in deformation patterns associated with soft-story irregularity.

Soft and weak stories, although technically different, can occur at the same time. Combined soft- and weak-story house irregularities have been the primary cause of story failure or collapse and earthquake fatalities in wood light-frame houses in the United States. To date, story failure has only been observed in houses that would not meet the current *IRC* bracing requirements or would fall outside the scope of the *IRC*. Figure 2-15 illustrates soft- and weak-story behavior in

a single-family house. Figure 2-16 illustrates the loss of a soft and weak story in an apartment building.

Figure 2-15 House experiencing soft- and weak-story behavior in the Cape Mendocino earthquake. Deformed shape of garage door opening shows approximately 6 inches of horizontal movement in the first story.

Figure 2-16 Apartment building experiencing soft- and weak-story behavior in the Northridge earthquake. The two balcony rails with little separation at the center of the photo illustrate the collapse of the lowest story.

IRC Approach to House Configuration Irregularities – The *IRC* incorporates two approaches to limitation of irregularities. The first and more explicit approach is found in *IRC* Section R301.2.2.2.2, which directly limits a series of irregular house configurations. Specific exceptions allow inclusion of less significant irregularities within *IRC* prescriptive designs. For one- and two-family detached houses, these provisions are applicable in SDCs D_1 and D_2,. The *IRC* limitations on irregularities are derived from those required for engineered buildings by the *IBC* and *NFPA 5000*. Table 2-3 at the end of this chapter provides detailed discussion of the *IRC* Section R301.2.2.2.2 limits. Additional discussion may be found in the commentary to the 2003 *NEHRP Recommended Provisions*.

The second and less obvious approach is the *IRC* requirement for distribution of wall bracing. Along with braced wall lines at exterior walls, interior braced wall lines must be added so that the spacing between wall lines does not exceed 35 feet per *IRC* Section R602.10.1.1 (adjustable to 50 feet by an exception) or 25 feet in SDC D_1 or D_2 per Section R602.10.11. Maximum spacing between braced walls in a braced wall line is also regulated. Houses perform better if the walls are distributed throughout, rather than concentrated in limited portions of the structure. This allows the earthquake load to be resisted local to the area where it is developed. Higher earthquake loads develop when loading must be transmitted to bracing walls in another portion of the house. Good distribution of bracing walls helps to mitigate the adverse effects of many irregularities.

Stepped Cripple Walls – IRC Section R602.11.3 and Figure R602.11.3 provide specific detailing to reduce the effect of a concentration of load due to stepped concrete or masonry foundation walls. As illustrated in Figure 2-17, a direct tie to the tallest foundation segment provides uniform stiffness along the wall line.

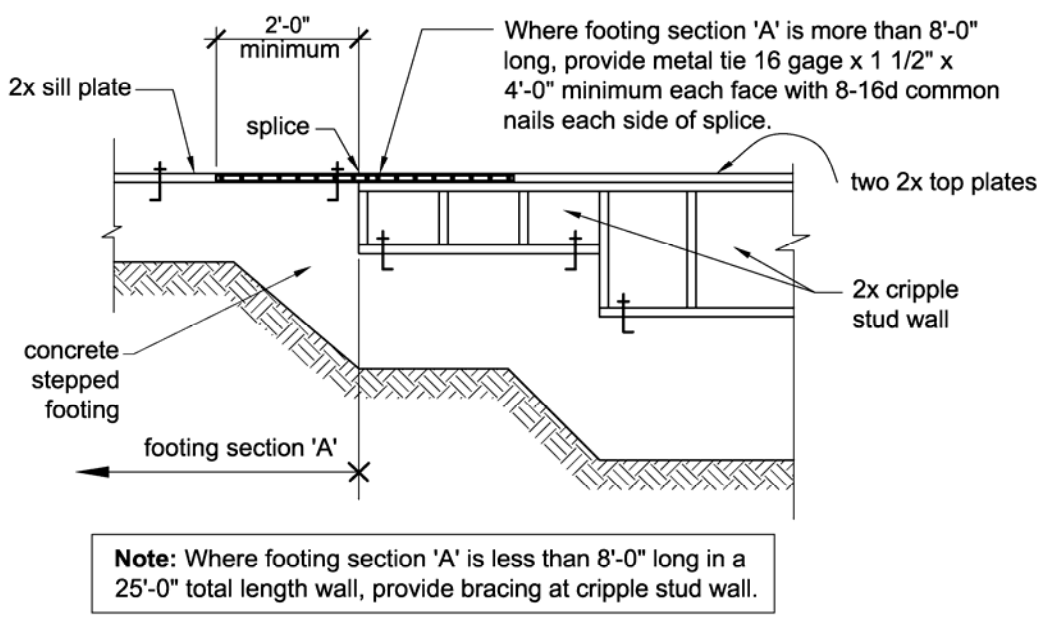

Figure 2-17 Detailing required for stepped foundation walls (ICC, 2003).

Above-code Recommendations: The concentration of damage as a result of irregular building configuration is equally applicable to earthquake loading in all SDCs and to wind loading. To date, the *IRC* has limited application to areas of high seismic risk. **Use of the irregularity limitations in SDCs A, B, and C and for wind loading will contribute to better building performance and is recommended as an above-code measure.**

Experimental and analytical results show that typical residential buildings are prone to soft-story irregularities. **Stiffening and strengthening of soft first stories is recommended as an above-code measure to reduce deformation and resulting damage.** Approaches to increasing first-story strength and stiffness include: increasing the length of wood structural panel sheathing; decreasing center-to-center spacing on sheathing nailing (although spacing of less than 4 inches is not recommended due to the possibility of splitting the framing and because other weak links could develop); using perforated shear wall construction (also called "continuously sheathed wall"); using segmented shear wall construction (also called "wood structural panel sheathed with overturning anchors"); or providing wood structural panel sheathing on both faces of bracing walls. See Chapter 6 of this guide for detailed descriptions of these measures.

Another common location of soft or weak stories is cripple walls. This is particularly true where perimeter cripple walls have no inside face sheathing and under-floor basement areas have few or no interior walls. Although the *IRC* has increased bracing wall lengths beyond those required by earlier codes, further increasing length and providing interior braced wall lines will help to limit deformation and damage. **Additional length of wood structural panel sheathing at the building perimeter and interior is recommended as an above-code measure to limit cripple wall deformation.**

Table 2-1 Load Path Connections for Horizontal Sliding

Item	Minimum Fastening per *IRC* Table R602.3(1) and Discussion	Illustration
H1	**Sheathing[a]** **Nailing[b]** 5/16" to ½" 8d common @ 6" 19/32" to 1" 8d common @ 6" $1^1/_8$" to $1^1/_4$" 10d common @ 6" • Resists roof sheathing sliding with respect to blocking below. • Six-inch nail spacing applies to supported sheathing edges and blocking. Twelve-inch spacing applies at other panel supports. • Rafter blocking is not always required by *IRC*; however, sheathing should be nailed to blocking where blocking is provided.	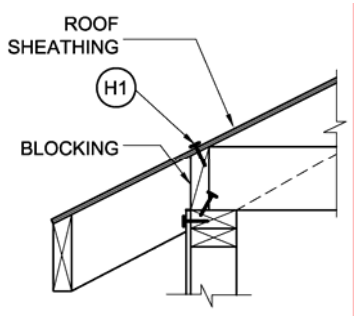
H2	Three 8d box (0.113"x$2^1/_2$") or three 8d common (0.131x$2^1/_2$") toenails each block. • Resists rafter blocking sliding with respect to wall top plate. • **Use of angle clips in lieu of toenails is a recommended above-code measure.** • Rafter blocking is not always required by *IRC*; however, it should be fastened where provided.	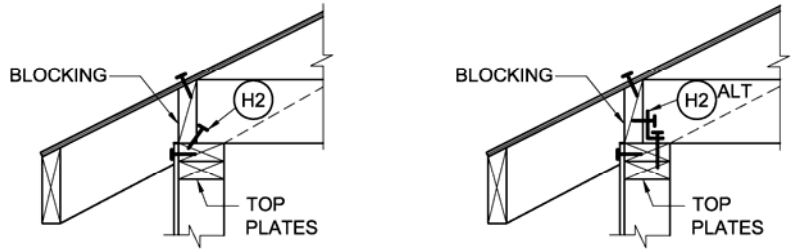
H3 & H4	**Sheathing[a]** **Nailing[b]** 5/16" to ½" 6d common @ 6" 19/32" to 1" 8d common @ 6" $1^1/_8$" to $1^1/_4$" 10d common @ 6" • Provides wall racking resistance. • Six-inch nail spacing applies to sheathing edges. Twelve-inch spacing applies at other studs.	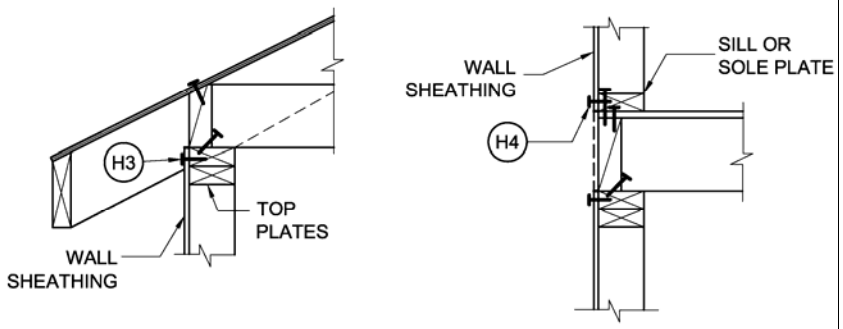

Item	Minimum Fastening per *IRC* Table R602.3(1) and Discussion	Illustration
H5	**At Braced Wall Panels** Three 16d box (0.135”x3$^1/_2$”) or three 16d sinker (0.148x3$^1/_4$”) face nails each 16 inches on center (space evenly). **Between Braced Wall Panels** One 16d box (0.135”x3$^1/_2$”) or one 16d sinker (0.148x3$^1/_4$”) face nail at 16 inches on center. • Resists wall sole plate sliding with respect to sheathing and blocking or rim joist below.	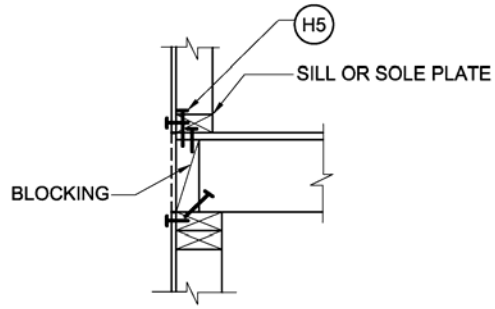
H6	**Sheathing[a]** **Nailing[b]** 5/16” to ½” 6d common @ 6” 19/32” to 1” 8d common @ 6” 1$^1/_8$” to 1$^1/_4$” 10d common @ 6” • Resists floor sheathing sliding with respect to blocking below. • Six-inch nail spacing applies to supported sheathing edges and blocking. Twelve-inch spacing applies at other panel supports.	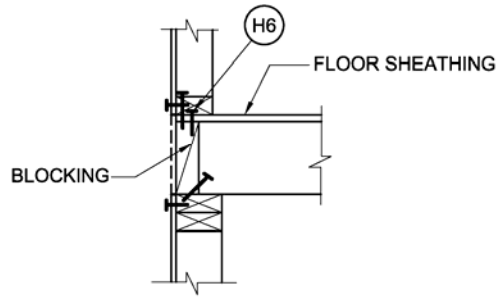
H7	Three 8d box (0.113”x2$^1/_2$”) or three 8d common (0.131x2$^1/_2$”) toenails each block. • Resists joist blocking sliding with respect to wall top plate. • **Use of angle clips in lieu of toenails is a recommended above-code measure.**	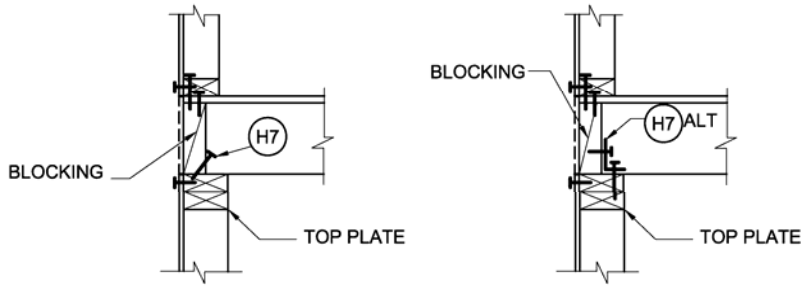

Item	Minimum Fastening (*IRC* Table R602.3(1) U.O.N.) & Discussion	Illustration
H8 & H9	**Sheathing[a]** / **Nailing[b]** 5/16" to ½" — 6d common @ 6" 19/32" to 1" — 8d common @ 6" $1^1/_8$" to $1^1/_4$" — 10d common @ 6" • Provides wall racking resistance. • Six-inch nail spacing applies to sheathing edges. Twelve-inch spacing applies at other studs.	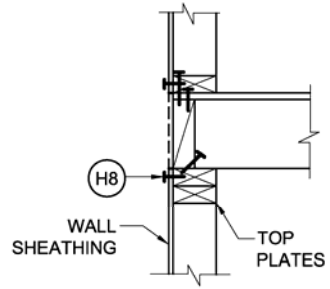 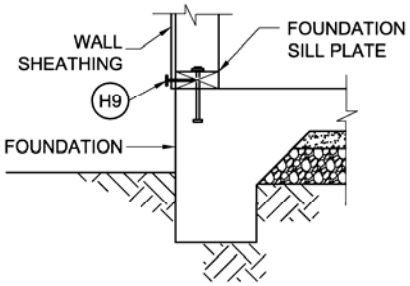
H10	Anchor bolts in accordance with *IRC* Sections R403.1.6 and R403.1.6.1. Steel plate washers in accordance with R602.11.1. Requirements vary by SDC. See Chapter 4 of this guide for further discussion. • Resists foundation sill plate sliding with respect to slab-on-grade or other foundation.	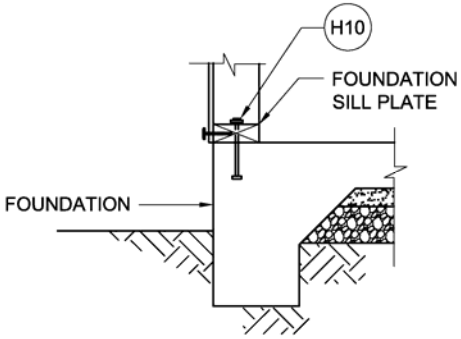
H11	Foundation embedment in accordance with *IRC* Section 403.1.4 provides for development of lateral bearing and friction, which permits transfer of loads between the foundation and supporting soil. • Resists foundation sliding relative to soil (grade).	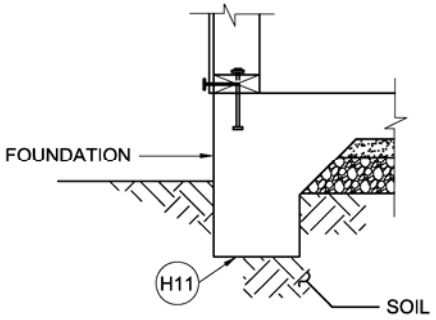

a. Wood structural panel sheathing; see *IRC* Table R602.3(1) for other sheathing materials.
b. Common nail diameter and length: 6d: 0.113"x2", 8d: 0.131"x2-1/2", 10d: 0.148"x3".

Table 2-2 Load Path Connections for Overturning

Item	Overturning Load Path Description and Discussion	Illustration
OV1	When Wall 1 is loaded from left to right, the wall tries to overturn causing the lower left corner to uplift. This illustration shows a hold-down strap restraining this uplift. The hold-down strap carries tension from an end post or studs in the second-story wall to an end post or studs in the first-story wall, which in turn must be anchored to the foundation (OV5)	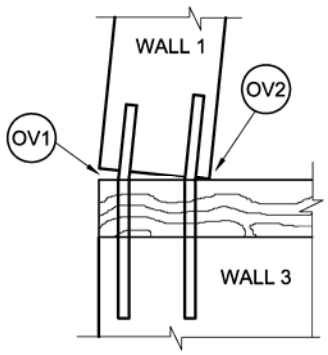
OV2	When Wall 1 is loaded from left to right and an uplift load occurs at OV1, an approximately equal downward load occurs at OV2. This load will be in the post or studs at the end of the wall and will push down on the floor framing and first-story wall. This load will be transmitted through a first-story post to the foundation. When Wall 1 is loaded from right to left, there is an uplift load in the hold-down strap at OV2. Because this end of the wall is not aligned with a wall end in the first story, attention is needed to make sure that a post is added in the first-story wall for strap nailing. The first-story post can have edge nailing to the wall sheathing and transfer the uplift into the first-story wall or, alternatively, can be anchored directly to the foundation with an additional hold-down anchor. One or the other of these anchorage methods is needed to complete the load path.	
OV3	When Wall 2 is loaded from left to right, the wall tries to overturn causing the lower left corner to uplift. The location of OV3 over a first-story header makes the load path more complex than OV1. Hold-down strap OV3a carries the uplift load from the Wall 2 end post to the first-story header. Because the uplift load can be larger than the minimum load on the header, straps OV3b and OV3c are shown tying the header down to the first-story posts or studs. If this is not done, it might be possible for the header to pull up. When Wall 2 is loaded from right to left, a downward load occurs at OV3a. This downward load adds to the load already in the header and the studs supporting the header. When Wall 2 extends more than a foot over the header, the condition is considered an irregularity and is subject to limitations in SDC D_1 and D_2.	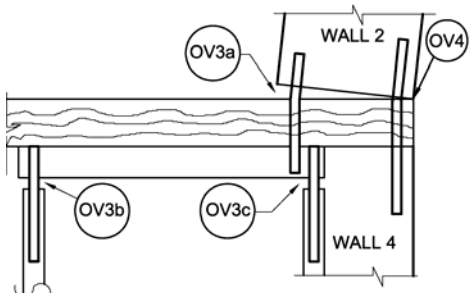
OV4	When Wall 2 is loaded from left to right and an uplift load occurs at OV3a, an approximately equal downward load occurs at OV4. This load will be in the post or studs at the end of the wall and will push down on the floor framing and first-story wall. This load will be transmitted through a first-story post to the foundation.	

Item	Overturning Load Path Description and Discussion	Illustration
OV5	When Wall 3 is loaded from left to right, the wall tries to overturn causing the lower left corner to uplift. This illustration shows a hold-down strap restraining this uplift. The hold-down strap carries tension from an end post or studs in the first-story wall to the foundation. The uplift load in the first-story end post or studs is a combination of the second-story uplift load from OV1 and the uplift load accumulated over the height of the first story. Hold-downs anchored to the foundation should be used only where substantial continuous foundations are provided. Hold-downs anchored to existing foundations that are weak or that do not meet current dimensional requirements require engineering guidance. Hold-downs anchored to isolated footings require engineering guidance.	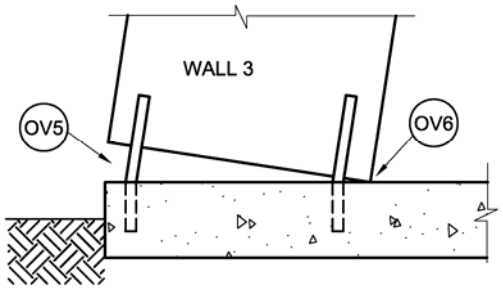
OV6	When Wall 3 is loaded from left to right and an uplift load occurs at OV5, an approximately equal downward load occurs at OV6. This load will be in the post or studs at the end of the wall and will push down on the foundation. This load will be a combination of the downward load OV2 from Wall 1 and the load accumulated over the height of Wall 3. An exact engineering calculation would adjust this downward load based on the narrower width of Wall 2 and the uplift from the hold-down at OV3b.	
OV7	When Wall 4 is loaded from left to right, the wall tries to overturn causing the lower left corner to uplift. This illustration shows a hold-down strap restraining this uplift. The hold-down strap carries tension from an end post or studs in the first-story wall to the foundation. The uplift load in the first-story end post or studs is a combination of the second-story uplift load from OV3c and the uplift load accumulated over the height of the first story.	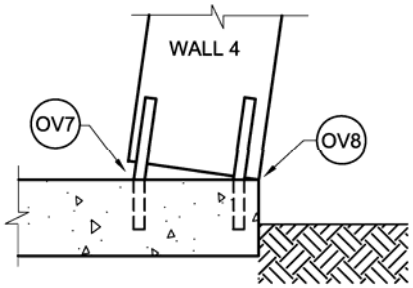
OV8	When Wall 4 is loaded from left to right and an uplift load occurs at OV7, an approximately equal downward load occurs at OV8. This load will be in the post or studs at the end of the wall and will push down on the foundation. This load will be a combination of the downward load OV4 from Wall 2 and the load accumulated over the height of Wall 4.	

Details

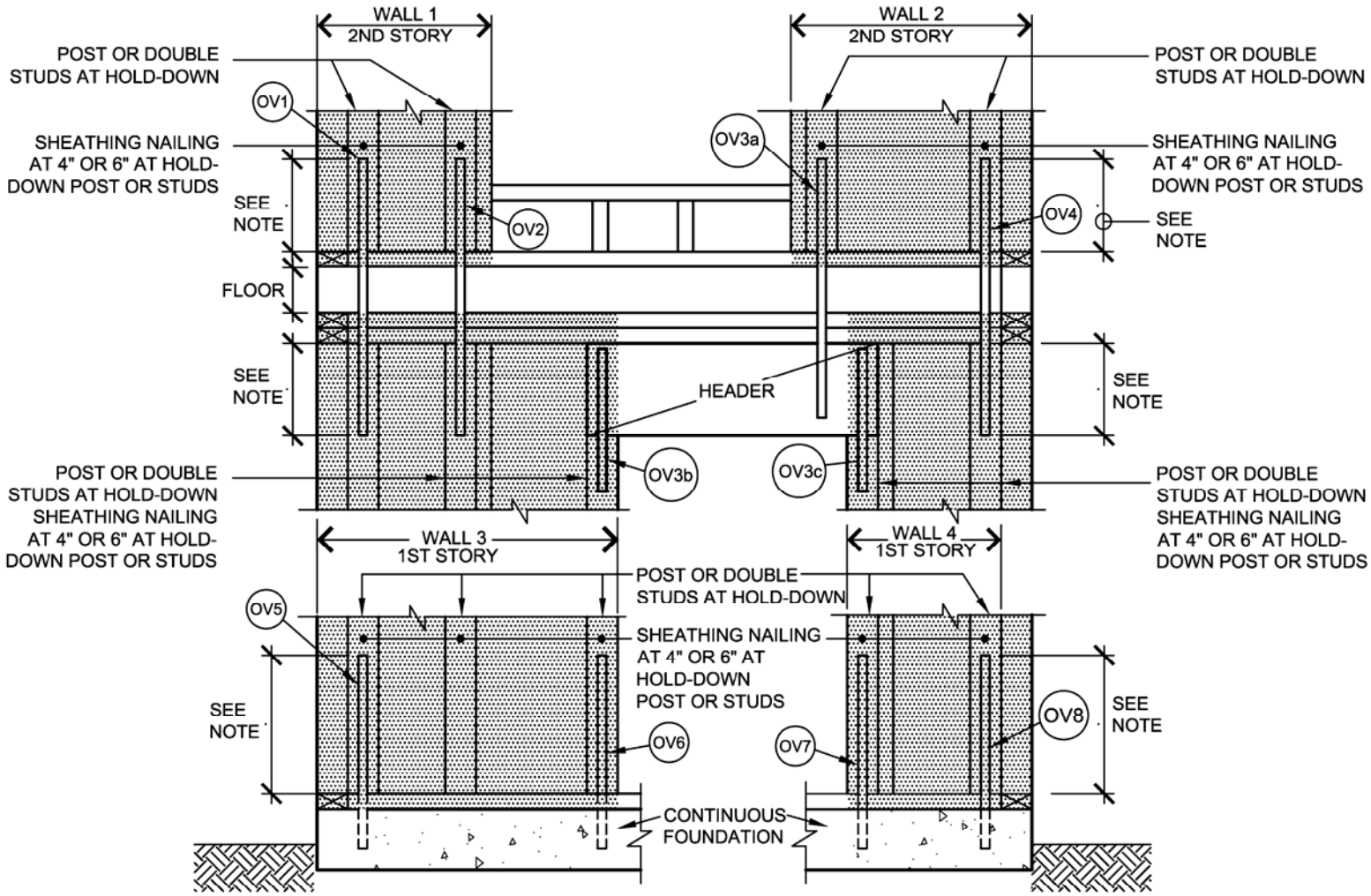

NOTE: FASTEN HOLD-DOWN STRAP OR BRACKET TO HOLD-DOWN POST OR STUDS USING QUANTITY, TYPE AND SIZE OF FASTENER SPECIFIED BY HOLD-DOWN MANUFACTURER

Table 2-3 *IRC* House Configuration Irregularities.

Irregularity Number	*IRC* Section R301.2.2.2 Description	Discussion	Illustration
1	When exterior shear wall lines or braced wall panels are not in one plane vertically from the foundation to the uppermost story in which they are required.	***IRC* May Be Used If:** The out of plane offset does not exceed four times the nominal depth of the floor joists and the detailing requirements of the exception are met. **Engineered Design Is Required If:** The out-of-plane offset exceeds that permitted or the detailing provisions are not followed. **Discussion:** Braced wall panels are intended to be stacked in order to maintain uniform strength and stiffness at each story and to aid in continuity of the load path. Support of braced wall panels on cantilevers and set backs can reduce their strength, stiffness and continuity.	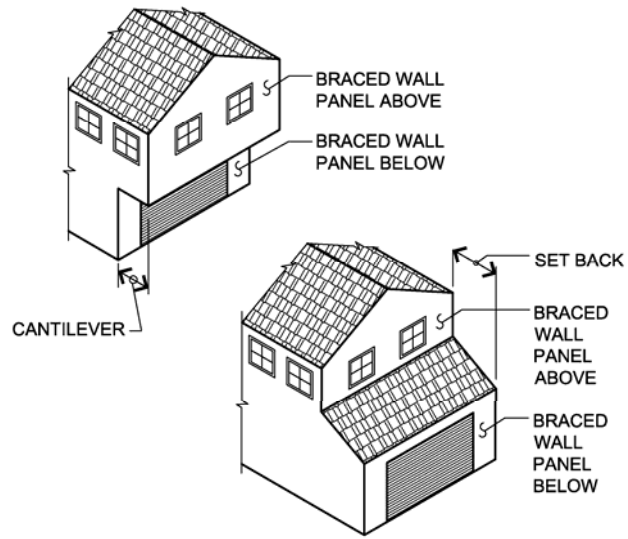
2	When a section of floor or roof is not laterally supported by shear walls or braced wall lines on all edges. Also called an "Open Front" irregularity.	***IRC* May Be Used If:** A section of floor or roof extends not more than six feet beyond the braced wall line, and the cantilever does not support a braced wall panel. **Engineered Design Is Required If:** The floor or roof extension is greater than six feet or is supporting a braced wall panel. **Discussion:** Placement of bracing walls at the edge of each floor or roof section aids in the uniform distribution of bracing and aids in ensuring continuity of the load path. Where bracing walls are not provided at all edges, rotational behavior (plan irregularity) may result.	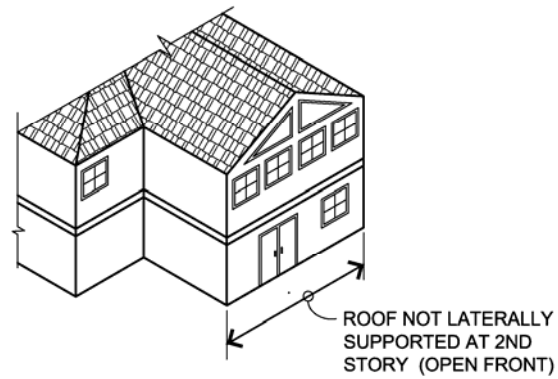

Irregularity Number	*IRC* Section R301.2.2.2 Description	Discussion	Illustration
3	When the end of a braced wall panel occurs over an opening in the wall below and ends at a horizontal distance greater than 1 foot from the edge of the opening. This provision is applicable to shear walls and braced wall panels offset out of plane as permitted by the exception to Item 1 above.	***IRC* May Be Used If:** The braced wall panel does not extend more than one foot over the header below, or if the header meets the requirements of the exception. **Engineered Design is Required If:** The braced wall panel extends more than 1 foot over a header and the header is not selected in accordance with exception requirements, or if the entire braced wall panel falls on the clear span of the header. **Discussion:** When earthquake loads are applied to braced wall panels, large downward loads develop at the panel ends due to overturning (see Table 2). If the downward load falls on a header that is not strong or stiff enough, the effectiveness of the bracing is reduced and localized damage may occur.	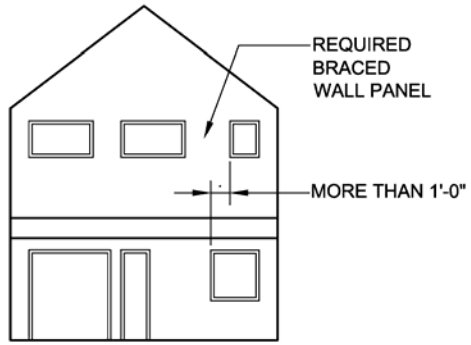 EXTERIOR ELEVATION
4	When an opening in a floor or roof exceeds the lesser of 12 feet or 50 percent of the least floor or roof dimension.	***IRC* May Be Used If:** Floor and roof openings are kept to minimum size, such as standard stair openings. **Engineered Design Is Required If:** Stair openings are enlarged, such as to create entry foyers or two story great rooms, or accommodate large skylights. **Discussion:** Large floor and roof openings can affect the uniform distribution of earthquake loads to bracing walls, resulting in increased deformations and concentration of damage in the floor, roof and bracing wall systems.	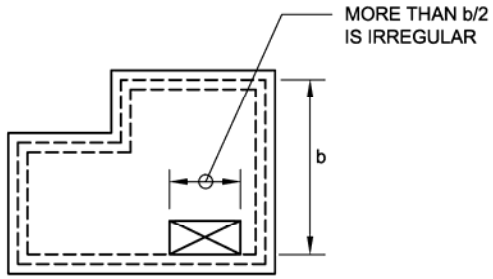 PLAN VIEW

Irregularity Number	*IRC* Section R301.2.2.2 Description	Discussion	Illustration
5	When portions of a floor level are vertically offset. Also called "Split Level" irregularity.	***IRC* May Be Used If:** Floor framing on either side of a common wall is close enough in elevation so that straps or other similar devices can provide a direct tension tie between framing members on each side of the wall. **Engineered Design Is Required If:** Floor framing on either side of a common wall cannot be directly tied together. **Discussion:** This irregularity results from observed earthquake damage in which one of two floor or roof levels pulled away from a common wall, resulting in local collapse. The direct tie limits the distance that either floor system can pull away, reducing likelihood of losing vertical support.	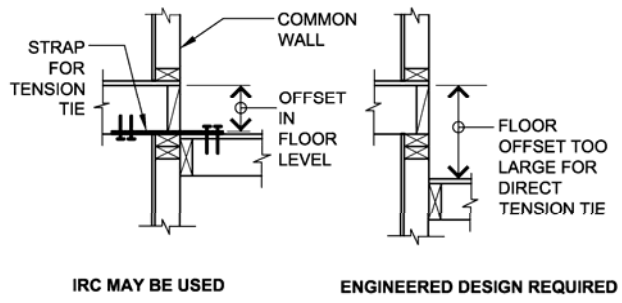
6	When shear walls and braced wall lines do not occur in two perpendicular directions.	***IRC* May Be Used If:** Required braced wall panels are oriented in the house longitudinal and transverse directions. **Engineered Design Is Required If:** Required bracing walls fall at angles other than longitudinal and transverse. **Discussion:** It has become somewhat common for houses to have walls that fall at an angle to the main transverse and longitudinal directions (often at 45 degrees). Where angled walls are not required for bracing, this is not a concern. Walls used for bracing must be aligned in the longitudinal or transverse direction. When the angle of bracing walls varies, the earthquake loads in the walls vary from those assumed in developing the *IRC* provisions. Non-standard load path detailing may also be required.	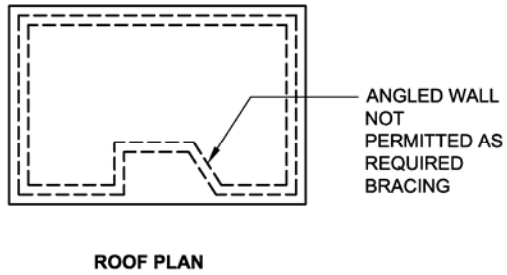

Irregularity Number	*IRC* Section R301.2.2.2 Description	Discussion	Illustration
7	When stories above grade partially or completely braced by wood wall framing in accordance with Section R602 or steel wall framing in accordance with Section R603 include masonry or concrete construction.	***IRC* May Be Used If:** Concrete or masonry construction within a light-frame house is limited to those items listed in the exception (fireplaces, chimneys and veneer). **Engineered Design Is Required If:** Other concrete or masonry construction is mixed with light-frame walls in any story above grade. **Discussion:** The *IRC* wall bracing requirements for wood or steel light-frame walls are proportioned to resist earthquake loads from light-frame wall systems only. Introduction of concrete or masonry will increase earthquake loads beyond the wall bracing capacity. In addition, introduction of concrete or masonry walls will likely effect the distribution of wall stiffness, causing a plan irregularity.	

Chapter 3
FOUNDATIONS AND FOUNDATION WALLS

This chapter discusses foundations and foundation walls constructed using the two most common foundation materials – concrete and masonry. Although the *IRC* permits the use of treated wood for foundations and foundation walls and insulating concrete form (ICF) for foundation walls, this guide does not cover those materials other than to inform the reader that wood foundations in Seismic Design Categories (SDCs) D_1 and D_2 require engineering design and many of the reinforcement requirements for concrete also apply to ICF (see Chapter 4 of the *IRC* for more information on the use of these materials). The subject of frost protection of foundations also is not discussed in this guide but, where required by the code (see *IRC* Section R403.1.4.1) or local regulations, foundations must either extend below the frost line or be protected from frost using approved methods.

3.1 GENERAL FOUNDATION REQUIREMENTS

Foundations are the interface between a house and the supporting soils. Many issues must be considered when selecting a foundation system including site topography, soils conditions, retaining requirements, loading from the house above, frost depth, and termite and decay exposure. Foundations primarily provide support for vertical gravity loads from the weight of a house and its contents, but they also provide resistance to horizontal sliding resulting from earthquake ground motions and must resist vertical loads at the ends of braced walls. Regardless of Seismic Design Category, all houses require a continuous foundation extending at least 12 inches below undisturbed soil along all exterior walls as shown in Figure 3-1.

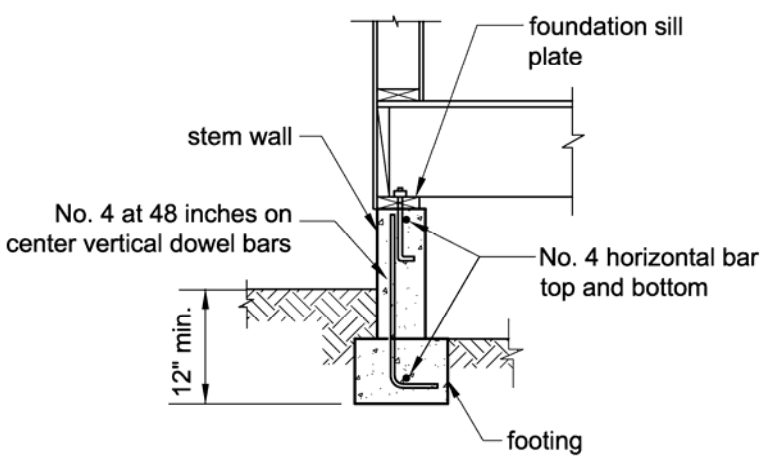

Figure 3-1 Perimeter foundation with separately placed footing and stem wall.

When earthquake ground motion occurs, the resulting ground movements, velocities, and accelerations are imparted to the foundation and, in turn, transferred to a house or other building. How well the house performs during an earthquake depends on the foundation being able to provide:

- Continued vertical support,
- Friction and passive bearing at the soil-to-foundation interface to minimize movement and damage,
- Anchorage at the foundation-to-house interface to minimize movement and damage, and
- Strength and stiffness sufficient to resist both horizontal loads and vertical loads resulting from racking and overturning of bracing walls within the house.

The foundation of the house must resist the sliding and overturning actions associated with an earthquake. These two actions are illustrated in Figures 3-2 and 3-3. The soil surrounding a foundation can resist sliding using a combination of friction along the bottom and bearing along the sides of the foundation; therefore, a wider and deeper foundation provides greater friction and greater bearing resistance than a shallow and narrow foundation. The whole overturning action illustrated in Figure 3-3 is resisted at the foundation in two ways. The portion of the foundation being pushed downward will bear against the soil below so a wider footing will provide more surface area to resist that downward load. At the uplift end of the foundation, the weight of any soil located above a footing helps to resist the loads trying to pull the foundation out of the ground; therefore, a deep inverted T-shaped foundation will provide greater resistance to uplift than a shallow footing or than a foundation having a shape that avoids having any soil above the top of the footing.

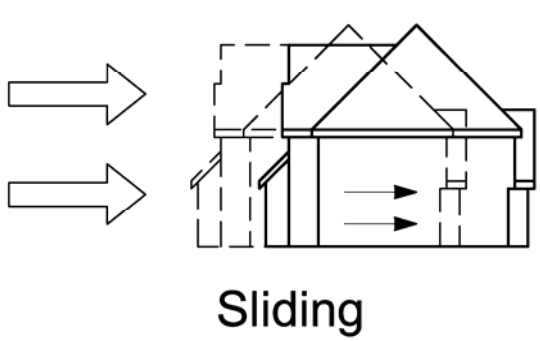

Figure 3-2 Sliding action resisted by foundation.

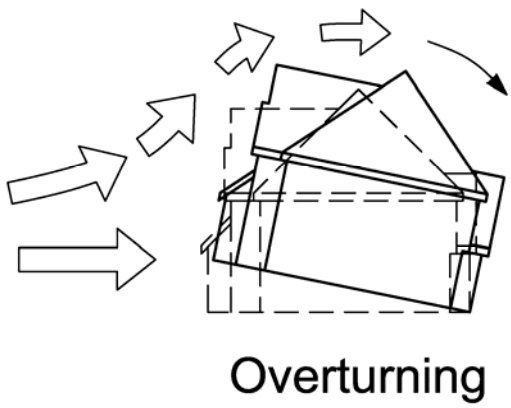

Figure 3-3 Overturning action resisted by foundation.

The *IRC* discusses foundations (footings and stem walls) and foundation walls separately and contains requirements for those elements based on the materials used for their construction. This guide chapter is similarly organized and addresses foundations placed monolithically with a slab on grade and foundations having a combination footing and stem wall as illustrated in Figure R403.1(1) of the *IRC*. Foundation systems such as pilings, drilled piers, and grade beams require the involvement of a licensed design professional and are not discussed in this guide.

IRC foundation wall provisions have evolved from similar provisions in the *CABO One- and Two-Family Dwelling Code* and *Standard Building Code*. Neither the *IRC* nor the other building codes give definitive guidance on when to use the foundation wall provisions of *IRC* Section R404 rather than the footing stem wall provisions of *IRC* Section R403. The 2000 *IRC Commentary* notes that the foundation wall provisions are primarily for masonry and concrete basement walls. The provisions of *IRC* Section R404 become mandatory for wall heights of 5 feet and greater and for walls retaining unbalance fill of 4 feet or greater. For wall heights and unbalanced fill heights less than this, there are few practical differences between the foundation and foundation wall provisions.

IRC Section R403.1.2 contains a general rule applicable to buildings located in SDCs D_1 and D_2 that requires interior braced wall lines to be supported on a continuous foundation when the spacing between parallel exterior wall lines exceeds 50 feet. However, *IRC* Section R602.10.9 contains a slightly more restrictive requirement. For a two-story house in SDC D_2, a continuous foundation is required below all interior braced walls, even when the distance between exterior walls does not exceed 50 feet, unless three additional conditions can be met. Those conditions are:

- The distance between braced wall lines does not exceed twice the building width measured parallel to the interior braced wall line;

- In houses having either a crawl space or basement, cripple walls cannot exceed 4 feet in height; and

- In houses having a crawl space or basement, first-floor interior braced walls are supported on double joists, beams, or blocking as shown in Figure 3-4.

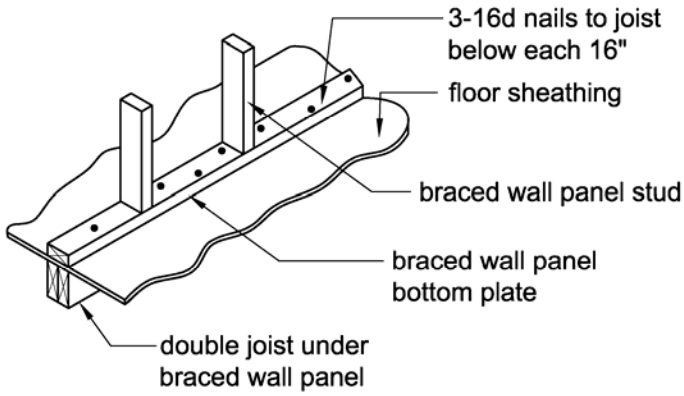

Figure 3-4 Interior braced wall on floor framing.

Above-code Recommendation: The main consequence of not providing a continuous foundation below a first-story interior braced wall line is that the floor must be strong enough to transfer earthquake loads from that interior location to a parallel perimeter foundation. This transfer of lateral loads can be accomplished using a wood-framed and -sheathed floor system, but this solution will definitely impart additional stresses in the floor and into cripple walls at the perimeter that would not occur if a foundation was provided below the interior braced wall line. Vertical loads due to the overturning loads in the braced wall segments also must be transferred to the perimeter foundation through bending action. **While the doubling of the floor joist is an improvement, supporting these walls directly on a continuous foundation is recommended to achieve above-code performance**.

For slab-on-grade construction in SDCs D_1 and D_2, when the conditions described above require an interior braced wall line to have a foundation, the foundation depth along that interior wall must be at least 18 inches below the top of the slab as shown in Figure 3-5.

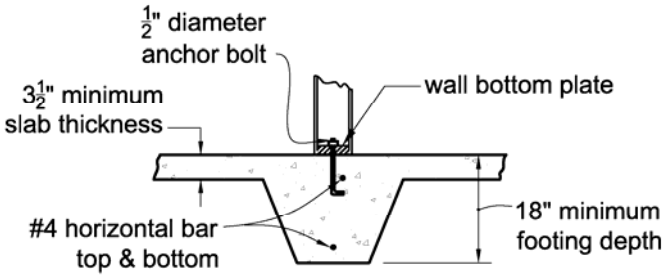

Figure 3-5 Foundation requirements for interior braced wall line on slab-on-grade construction.

3.2 CONCRETE FOUNDATIONS

Regardless of Seismic Design Category, the minimum specified concrete strength for foundations (and foundation walls) is 2,500 pounds per square inch (psi) with higher strength necessary when a foundation is exposed to the weather and the house is located in a moderate or severe weathering probability area as shown in *IRC* Figure R301.2(3). Specifying 2,500 psi refers to a measure of the concrete's compressive strength. To enable a concrete foundation to resist all of the possible loads to which it may be exposed, compressive strength needs to be complimented with tension capacity. Since concrete is unable to resist tension stresses without cracking, steel reinforcing bars are added to resist tension. Reinforcing is particularly valuable when resisting cyclic earthquake loads because, within the span of a few seconds, the loads may start by causing compression and then reverse to cause tension in the same location.

IRC Section R403.1.3 specifies minimum reinforcement of concrete footings located in SDCs D_1 and D_2. Separate subsections within *IRC* Section R403.1.3 address reinforcing of foundations consisting of a footing and a stem wall and reinforcing of the footing along the perimeter of a slab-on-grade. *IRC* Section R403.1.3 also contains an exception that allows omitting the longitudinal reinforcing in concrete footings for houses that are three stories or less in height and constructed with stud walls, regardless of the Seismic Design Category.

Above-code Recommendation: To obtain above-code performance in SDC C, it is recommended that the minimum foundation reinforcing requirements for SDCs D_1 and D_2 be used. This added reinforcing will provide better footing performance whether it is resisting earthquake loads or loads induced by differential soil settlement, expansive soils, or frost heave.

Typically, the bottom portion of a concrete footing must have one horizontal No. 4 reinforcing bar located 3 inches up from the bottom of the concrete (clear from the soil along the bottom of the footing). When a foundation consists of both a footing (horizontal foundation segment) and short stem wall (vertical foundation segment), two No. 4 continuous horizontal reinforcing bars are required – one in the bottom of the footing and one near the top of the stem wall as shown in Figure 3-6.

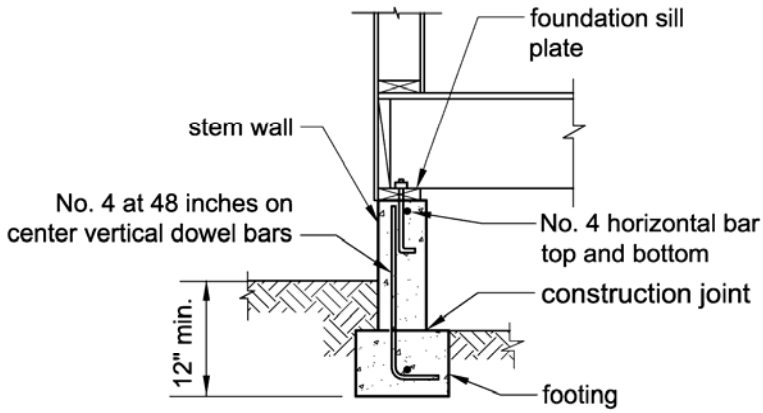

Figure 3-6 Recommended minimum reinforcement for concrete footings and stem walls.

Above-code Recommendations: When horizontal reinforcing bars are used in foundations, they need to be continuous to perform their intended function**.** The *IRC* does not provide any specific guidance on reinforcing continuity; therefore, the following **above-code** recommendation is derived from the basic standard for concrete construction (ACI 318-02, 2003). **Where two or more pieces of reinforcing steel are used to provide continuous horizontal reinforcing, the ends of the bars should be lapped to provide continuity. The minimum recommended lap for No. 4 bars is 24 inches and for No. 5 bars is 30 inches. As shown in Figure 3-7, horizontal bars terminating at corners of perimeter foundations and where an interior foundation intersects a perimeter foundation should have a standard 90-degree hook of 8 inches for No. 4 bars or 10 inches for No. 5 bars.**

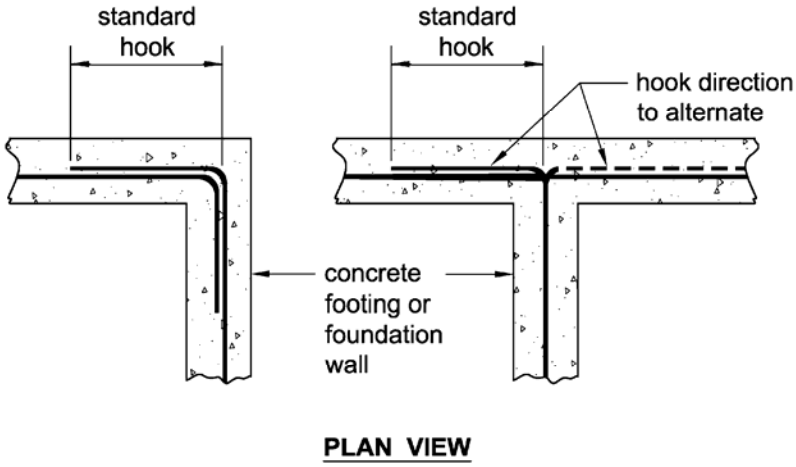

Figure 3-7 Above-code horizontal reinforcing lap at corners and intersections.

In SDCs D_1 and D_2, No. 4 vertical reinforcing is required at 48-inch maximum spacing if a construction joint (also called a "cold joint") occurs between the footing and the stem wall. This often is referred to as a "two-pour" foundation because the concrete for the footing and the concrete for the wall are poured at separate times. These vertical bars (also called "dowels") must extend a minimum of 14 inches into the stem wall and be hooked at the bottom into the footing as shown in Figure 3-6. These dowels provide a very important connection because, without them, earthquake loads can cause sliding to occur along the joint between the two separate concrete placements. Sliding along a similar construction joint between a slab-on-grade and a separately poured footing below the slab edge occurred during the 1994 Northridge earthquake and caused severe damage in houses located in Simi Valley, California.

When a house has a concrete slab-on-grade with a thickened edge forming its perimeter foundation (also called a "turned-down slab edge"), one No. 4 horizontal reinforcing bar is required in the top and bottom of this footing as shown in Figure 3-8. The exception to this is when the slab and footing are poured at the same time; in this case, a single No. 5 bar or two No. 4 bars located in the middle third of the combined slab and footing depth may be used. For slab-on-grade construction in SDCs D_1 and D_2, interior bearing walls and interior braced walls required to have a continuous foundation must have the concrete slab thickened to 18 inches to form a foundation as shown in Figure 3-5.

Above-code Recommendation: Although the *IRC* is basically silent on how to reinforce these interior thickened slab foundations, it is recommended that they should be reinforced as described above for the foundation along the slab perimeter. Horizontal reinforcing in slab-on-grade foundations should be continuous as described earlier.

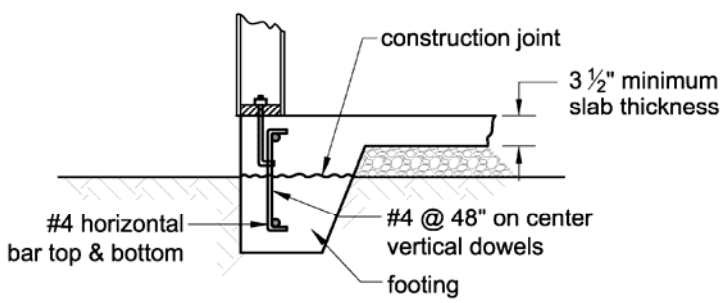

Figure 3-8 Above-code use of vertical dowels to connect a slab-on-grade to a separately poured footing.

Above-code Recommendation: When a slab-on-grade is poured separately from the footing below, the *IRC* does not specify any vertical reinforcing across this joint. When this condition occurs, however, the possibility of earthquake loads causing sliding along that joint is very real. The basic provisions of ACI 318-02, Sec. 11.7.9, for concrete require that all construction joints be provided with a mechanism for transferring loads through the joint. **Therefore, it is recommended that the same amount of vertical reinforcing required for a separately poured stem wall and footing condition (No. 4 at 48 inches on center) be installed to connect a slab to a separately poured footing as shown in Figure 3-8. In addition the surface of the construction joint should be cleaned to remove loose debris prior to placing the concrete slab.**

Above-code Recommendation: Anchor bolts connecting a wood sill plate to a foundation also must be installed in the foundation or stem wall. **Although it is possible to install anchor bolts during the placement of the foundation concrete before it has hardened (also called "wet setting"), this is not recommended. Anchor bolts should be installed and secured so that they will not move prior to placing the concrete**. The reason is that a wet setting can create a void in the concrete adjacent to the bolt. Anchor bolts, whether they have heads or hooks on the embedded end, will either make a hole or carve a slot as they are pushed into the wet concrete. That hole or slot forms a void over the entire length of the bolt's embedment. This void prevents the bolt from completely bearing against the surrounding concrete and could result in movement of the bolt when subjected to earthquake loads. Additional anchor bolt requirements are provided at the end of this chapter.

3.3 MASONRY FOUNDATIONS

Masonry foundation requirements are generally more dependent upon the Seismic Design Category of the site than concrete foundation requirements. Solid clay masonry or fully grouted concrete masonry and rubble stone masonry may be used for foundations in SDCs A, B, and C; however, rubble stone masonry is not allowed in SDCs D_1 and D_2 due to its relatively low strength and stability.

Above-code Recommendation: Because of their relatively low strength and stability, rubble stone foundations are not recommended for use in SDC C as an above-code measure.

Above-code Recommendation: Like concrete, a masonry foundation with a stem wall must have at least one No. 4 horizontal bar in the bottom of the footing and one No. 4 bar near the top of the stem wall. This horizontal reinforcing needs to be continuous just as it does in concrete construction. **Therefore, the above-code recommendations for lap splices are 24 inches for No. 4 bars and 30 inches for No. 5 bars with hook extensions at corners as shown in Figure 3-7**.

In SDCs D_1 and D_2, masonry stem walls also must have vertical reinforcing and must be grouted as required by *IRC* Sections 606.11.3 and 606.12. (See Chapter 6 of this guide for a more detailed discussion of grouting in masonry wall construction.) For a masonry stem wall supported on a concrete footing, the vertical reinforcing must be one No. 4 bar at 48-inches maximum spacing, extending into the footing with a standard hook at the bottom, similar to what is shown in Figure 3-6. This is necessary to prevent sliding along the bottom mortar joint between the concrete footing and the masonry stem wall.

Above-code Recommendation: In order to prevent sliding along the bottom mortar joint between the concrete footing and the masonry stem wall, it is recommended that masonry stem walls in SDC C also use the vertical reinforcing required in SDCs D_1 and D_2.

3.4 FOOTING WIDTH

Footing width is not dependent upon Seismic Design Category but instead is solely based on vertical load considerations. The minimum width for a concrete or masonry footing is dependent on the load bearing capacity of the soil measured in pounds per square foot (psf) and the number of stories and the weight of the wall it supports. For instance, when brick veneer is installed, this added weight requires a wider footing.

The minimum soil bearing capacity considered by the *IRC* is 1,500 psf. In this case, the minimum footing width is 12 inches but it can increase to as much as 32 inches for a three-story house with brick veneer as shown in Figure 3-9.

Bearing capacity is determined based on the soil classification determined for the site. Soil classifications and corresponding bearing capacities are listed in *IRC* Table R401.4.1 at the beginning of *IRC* Chapter 4. The soil classification system is described in *IRC* Table R405.1. There are four distinct groups of soils that comprise a total of 15 separate soil classifications ranging from well graded gravels as the best and peat as the worst. Accurate determination of soil bearing capacity requires correct classification of the soil at the building site and may require the expertise of a soils engineer or geologist. However, most building departments have determined the soil classification for most of the sites within their jurisdiction. Accurate determination of the correct site soil classification is important not just for determining the minimum footing width but also for determining the minimum reinforcing required for concrete or masonry foundation walls.

When a footing is constructed with a width at the bottom that is greater than the thickness of its stem wall or a width greater than the thickness required for a foundation wall (e.g., an inverted-T shape), the minimum thickness of the footing is 6 inches. *IRC* Section R403.1.1 also specifies both a minimum and maximum width for the footing portion of this inverted-T foundation. As a minimum, the projection of the vertical face of the footing must be at least 2 inches beyond each vertical face of the stem wall or foundation wall. The maximum projection may not exceed the thickness of the footing. These dimensional requirements for an inverted-T foundation are illustrated in Figure 3-9. These minimum and maximum projection limits of the footing beyond the stem wall are consistent with ACI 318 design of plain concrete footings. Based on those requirements, an L-shaped footing should not be permitted unless its dimensions and reinforcing are designed to account for the eccentricity of the vertical load on the footing.

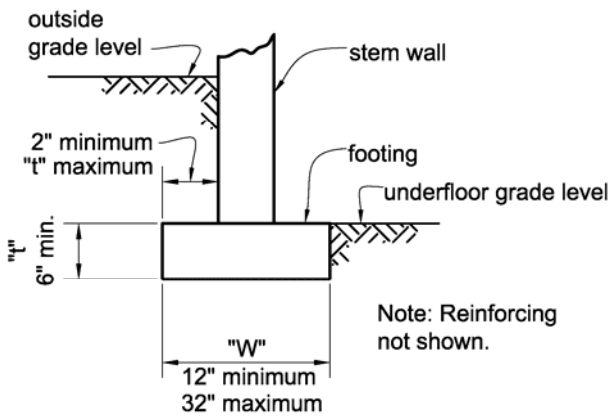

Figure 3-9 Inverted -T footing dimensions.

3.5 SPECIAL SOIL CONDITIONS

On some sites, such as those in marshy areas or bogs, the bearing capacity of the soil may be known or suspected to be less than 1,500 psf. In such a case, the *IRC* requires a soil investigation and report to determine the actual bearing capacity of the soil and to define an appropriate footing width and depth. Soil testing also is necessary when it is likely that existing soil has shifting, expansive, compressive, or other unknown characteristics. Local officials often are aware of such conditions in locations where previous buildings have been constructed and may have maps identifying such areas and/or special rules that apply to foundation construction in such areas. When existing soil data are not available, such as on previously undeveloped sites, it is always prudent to obtain tests to validate bearing capacity and to determine if expansive soils are present.

When expansive soils that exhibit large changes in volume (usually in response to changes in moisture content) are encountered, foundations must be designed in accordance with *IBC*

Chapter 18 because the prescriptive requirements of the *IRC* assume no such special conditions are present. Methods to address expansive soil include foundation designs to resist the stresses caused by the soil volume changes that are likely to occur, isolation of the foundation, removal of the expansive soil, or stabilization of the soil by chemical, dewatering, presaturation, or other methods. Failure to identify and adequately compensate for differential movements caused by expansive soils can result in excessive stresses on the foundation causing cracking of even reinforced concrete or masonry foundations. Foundation movement induced by expansive soil also can result in differential movement of the house's wood framed walls that can crack brick, gypsum wallboard, and stucco finishes. Movement of the walls can create stresses that loosen the nailed connections of wall sheathing used to provide lateral bracing. These effects can, in turn, weaken a building's earthquake resistance so it is very important to address expansive or other special soil conditions to limit differential foundation movement.

3.6 FOUNDATION RESISTANCE TO SLIDING FROM LATERAL LOADS

Foundations are the final link in the load path within a building to transfer the earthquake loads to the ground. At the foundation level, the combined lateral loads from the entire building are attempting to push the building laterally. To resist movement, the foundation pushes against the soil that surrounds it. Consequently, footing width and depth are factors that determine the resistance that can be provided by the foundation to earthquake ground motions. This is because footing width determines the horizontal surface area of the bottom of a foundation in contact with the ground and the depth determines the vertical surface area bearing against the soil on either side. These surface areas provide resistance to sliding through a combination of friction and bearing against the soil as shown in Figure 3-10. Therefore, a wider or deeper foundation will be capable of resisting greater lateral loads than a narrower or shallower foundation. Similarly, the sliding resistance of a slab-on-grade house will be greater than that of one having only a perimeter foundation due to the added frictional surface area provided by the underside of the slab.

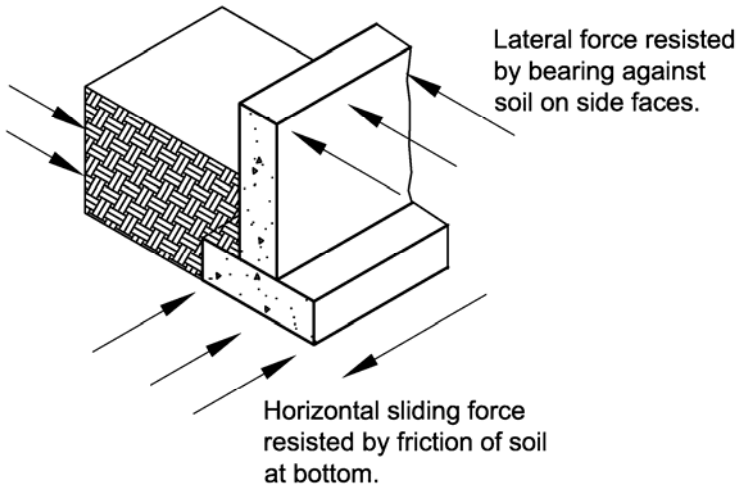

Figure 3-10 Lateral resistance provided by foundation.

Above-code Recommendation: For houses with the first floor located above a crawl space rather than a basement, *IRC* Section 408.5 allows finished grade under the floor to be located at the bottom of the footing except where the groundwater table is high, surface drainage is poor, or the area is prone to flooding. However, when the finished grade is located at the bottom of the footing, the vertical face of the footing on that side does not bear against soil. **Therefore, as an above-code measure, in SDCs D_1 and D_2, it is recommended that crawl space perimeter footings have their entire depth below the finished grade of the crawl space.** Embedment along both vertical faces of the footing provides additional bearing surface area to resist sliding loads perpendicular to the exterior walls.

Above-code Recommendation: To aid in providing sliding resistance, the bottom of footings should be level. The *IRC* does allow the bottom of footings to be sloped at a rate of not more than 1 foot vertical in 10 feet horizontal. When this maximum slope along the bottom of the footing cannot be met, the bottom must be stepped. Similarly, the top of foundations must be level but can also be stepped. **As an above-code measure when steps are used, the horizontal reinforcing should be bent to extend through the steps as shown in Figure 3-11**.

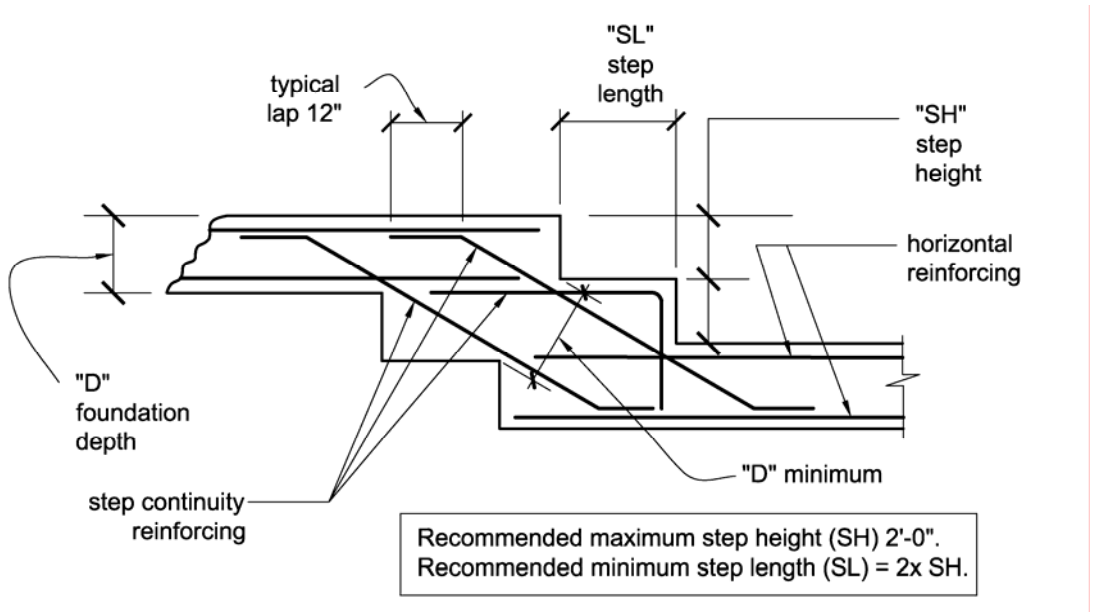

Figure 3-11 Above-code stepped foundation reinforcing detail.

Above-code Recommendation: Special consideration also must be given to sites where the ground slopes upward or downward beyond the limits of the perimeter foundation to ensure that adequate resistance to foundation sliding and settlement are provided and to protect against the effects of drainage, erosion, and shallow failures of the sloping surface. Prescriptive rules for setbacks from either an ascending or descending slope are given in *IRC* Chapter 4. Smaller (or greater) setbacks may be approved (or required) based on a soil investigation report prepared by a qualified engineer. **Because landslides can be triggered by earthquakes, any building site having natural or man-made sloping terrain above or below should be thoroughly evaluated for landslide potential even when the prescriptive setbacks of the code are met.**

3.7 SPECIAL CONSIDERATIONS FOR CUT AND FILL SITES

A hillside site can result in foundations being supported on soils having very different bearing capacities. Figure 3-12 shows a situation where a portion of the foundation is supported on rock and the other side is supported on a fill that extends above the existing rock grade. This condition often occurs when soil is removed (cut) from the high side of a lot and the lower side has fill material installed to create a level building pad. Although the *IRC* requires all fill soils to be designed, installed and tested in accordance with accepted engineering practice, there is no specific guidance given in the *IRC* regarding what should be addressed. Site-specific guidance on the design and placement of fill material is a particularly important concern in high seismic areas.

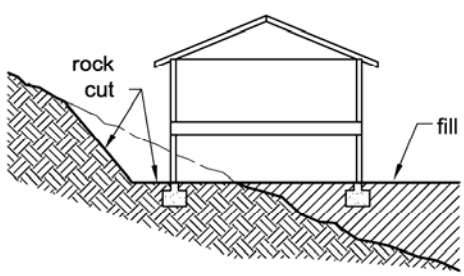

Figure 3-12 Foundation supported on rock and fill.

Studies of damage to houses located on cut and fill sites as a result of the 1971 San Fernando (McClure, 1973, Slosson, 1975) and the 1994 Northridge (Stewart, et al., 1994 and 1995) earthquakes document the consequences of improperly installed and compacted fill. Figure 3-13 shows an example of the type of damage that occurred to slab-on-grade houses during the Northridge earthquake. Generally, these sites experienced settlement and extension of the fill portion of the site and vertical displacement along the line of transition from cut to fill.

Above-code Recommendation: To meet the intent of the *IRC* requirement for all fill soils to be designed, installed and tested in accordance with accepted engineering practice, it is recommended that the reporting requirements conform to those specified in *IBC* Section 1803.5.

Figure 3-13 Example of damage caused in building on cut and fill site.

Above-code Recommendation: Even with proper installation and compaction of engineered fills, earthquakes are expected to result in some differential settlement and consequent damage when a house has a portion of its foundation on a cut pad and other portions on fill. **Therefore, in SDCs C, D_1 and D_2, sites that require a cut and fill approach should be avoided, particularly if a slab-on-grade foundation is used. Where cut and fill grading of a site is unavoidable, increased levels of quality control should be used to ensure the optimum installation of the fill, and foundations should be designed to either accommodate or resist the expected settlement**.

3.8 FOUNDATION WALLS

Foundation walls are typically basement walls but also include foundation stem walls that extend from the top of a footing to the bottom of a wood framed floor and enclose a crawl space as shown in Figure 3-6. Depending on the difference in ground level on each side of a foundation wall, certain minimum requirements for reinforcing and wall thickness will apply. Foundation wall construction is dependent to some extent on Seismic Design Category, particularly for SDCs D_1 and D_2 sites.

Foundation walls can be constructed of concrete, masonry, or preservatively treated wood or by using insulating concrete form (ICF) systems. As mentioned earlier, treated wood systems are not discussed in this guide. ICF foundation walls are likewise not discussed because *IRC* Section R404.4.1 limits use of ICF foundation walls to SDCs A, B and C; however, future *IRC* editions may allow adequately reinforced ICF foundation walls in SDCs D_1 and D_2 if proposed code changes on this subject are approved. Rubble stone masonry foundation walls also are not permitted in SDCs D_1 and D_2 for reasons similar to those that prohibit this material's use as a footing in SDC D_1 and D_2.

Regardless of Seismic Design Category, all foundation walls must extend a minimum of 6 inches above the adjacent grade or, when brick veneer is used on a wall, the foundation wall must extend a minimum of 4 inches above the adjacent grade.

Concrete and masonry foundation walls must conform to the prescriptive requirements of the *IRC* or may be based on other recognized structural standards such as ACI 318 for concrete or either NCMA TR68-A or ACI 530/ASCE 5/TMS 402 for masonry. When concrete or masonry walls are subject to hydrostatic pressure from groundwater or support more than 48 inches of unbalanced fill, without permanent lateral support at the top and bottom, they must be designed using accepted engineering practice. The discussion below relates only to the *IRC* prescriptive methods for concrete or masonry foundation walls.

Several terms used in this discussion warrant definition. "Plain concrete" and "plain masonry" are not necessarily devoid of all reinforcing; however, they have less reinforcing than is required to be officially designated as being "reinforced." "Unbalanced backfill" is defined as the difference in height between the exterior and interior finish ground levels except that, when an interior concrete slab floor is present, the height is measured from the top of the slab to the exterior finished ground level.

3.9 FOUNDATION WALL THICKNESS, HEIGHT, AND REQUIRED REINFORCING

The minimum thickness of plain concrete and plain clay or concrete masonry foundation walls ranges from 6 inches to 12 inches depending on several variables. These variables include:

- The height of the wall,
- The site's soil classification, and
- The height of any unbalanced backfill.

Foundation wall thickness also must be at least equal to the width of the supported wall.

For plain masonry foundation walls, the minimum thickness also is dependent on the use of solid masonry units or hollow units that can be either grouted or ungrouted. Generally, the minimum thicknesses for solid masonry and grouted hollow masonry are identical whereas the minimum thickness for ungrouted hollow masonry is greater. Minimum wall thickness for plain concrete and plain masonry walls, based on specific combinations of these variables, are listed in *IRC* Table R404.1.1(1).

For SDCs D_1 and D_2, *IRC* Section R404.1.4 imposes the following additional limitations on plain concrete and plain masonry foundation walls that are not specified in *IRC* Table R404.1.1(1):

- Wall height is limited to 8 feet.
- Unbalanced fill height is limited to 4 feet.
- A single horizontal No. 4 reinforcing bar shall occur in the upper 12 inches of the wall.
- Plain masonry walls shall be a minimum of 8 inches thick.
- Plain concrete walls shall be a minimum of 7.5 inches thick except that a 6-inch minimum thickness is permitted when the wall height does not exceed 4 feet 6 inches.
- Vertical reinforcing of masonry stem walls shall be tied to horizontal reinforcement located in the footing.

In SDCs D_1 and D_2, when the foundation exceeds 8 feet in height or supports more than 4 feet of unbalanced fill, additional minimum reinforcing requirements apply. First, two No. 4 horizontal reinforcing bars are required at the top of the wall rather than just one. In addition, a concrete or masonry wall's vertical reinforcing is required to meet additional prescriptive minimums. The vertical reinforcing size and maximum spacing are dependent on wall thickness, wall height, unbalanced fill height, and soil classification. Three *IRC* Tables — Tables R404.1.1(2), (3) and (4) – specify the minimum vertical reinforcing based on specific combinations of these variables. The *IRC* also allows alternative sizes and spacing of reinforcing up to a maximum spacing of 6 feet; however, the alternate size and spacing must result in an equivalent cross-sectional area of reinforcing per lineal foot of wall as prescribed in the tables.

Above-code Recommendation: As described earlier, reinforcing should always be continuous; therefore, lap splices are needed where discontinuities occur in either horizontal or vertical reinforcing. Lap lengths should not be less than 24 inches for No. 4 bars or 30 inches for No. 5 bars.

Regardless of Seismic Design Category, all vertical reinforcing for these reinforced masonry or concrete foundation walls must be at least ASTM Grade 60 (yield strength of 60,000 psi). This is important to note because No. 4 bars are commonly available in Grade 40, which has a lower yield strength. In addition, the distance from the soil side face of the wall to the centerline of the vertical reinforcing must be 5 inches in an 8-inch-thick wall, 6.75 inches in a 10-inch-thick wall, and 8.5 inches in a 12-inch-thick wall.

3.10 WOOD-FRAMED WALL BOTTOM PLATE AND FOUNDATION SILL PLATE ANCHORAGE

For the purpose of the following discussion, the terms "wall bottom plate" and "foundation sill plate" are used to distinguish between two different locations of wood members along a foundation. A wall bottom (sole) plate either is directly supported by a slab-on-grade foundation as shown in Figure 3-5 or is part of a cripple wall supported directly on a foundation when a slab on grade does not occur. A foundation sill plate is different in that it occurs without wall studs

framing on top of it; instead, a foundation sill plate is the bearing support between floor joists or floor beams and the foundation as shown in Figure 3-6.

In all Seismic Design Categories, where anchor bolts are required to connect a bottom plate or foundation sill plate to a foundation, the bolts must have a minimum embedment of 7 inches into a concrete or masonry foundation, and they must have a nut and washer tightened on each bolt. Typically, anchor bolts must be a minimum of 1/2-inch diameter and be spaced not to exceed 6 feet on center. However, in SDCs D_1 and D_2, the maximum bolt spacing is limited to 4 feet for buildings with more than two stories. Because the *IRC* prescribes bracing only for houses in SDC D_2 up to a maximum of two stories, the closer spacing is actually only applicable in SDC D_1 where three stories is permitted. This decreased bolt spacing provides 50 percent more shear capacity at the sill-plate connection in recognition that earthquake loads generated in a three-story building will be greater than those in a one- or two-story building.

Some builders may choose to use 5/8-inch diameter bolts at the standard 6 feet on center spacing in place of using 1/2-inch diameter bolts at a required 4 feet on center spacing. Based on bolt capacities listed in 2001 NDS Table 11-E, for most species of wood, 5/8-inch bolts at 6 feet on center spacing provide approximately 95 percent of the capacity of 1/2-inch bolts at 4 feet on center spacing. However, the approval of local officials should always be obtained prior to making any such substitution.

In SDCs D_1 and D_2, the washer to be installed under the anchor bolt nut must be a 3-inch by 3-inch square plate with a minimum thickness of 1/4 inch. This increased washer size limits the potential for splitting of bottom plates.

Above-code Recommendation: Splitting of sill plates can occur when the ends of braced wall segments are lifted vertically during the rocking motion braced walls undergo while resisting earthquake loads. Cyclic testing of shear walls has shown that a standard round cut washer is too small to provide any appreciable resistance to this uplift and allows sill plates to split but, when larger square washers are used, walls can sustain much higher lateral loads before sill plate splitting will occur. **For this reason, the use of plate washers is also recommended on anchor bolts connecting to the foundation in SDC C.**

3.11 REQUIRED LOCATIONS FOR ANCHOR BOLTS ALONG EXTERIOR WALLS

Independent of Seismic Design Category, anchor bolts are required to connect a wall bottom (sole) plate or foundation sill plate to foundations located along all exterior wall lines. A minimum of two anchor bolts are required in each individual length of plate, with one bolt located not more than 12 inches nor less than 7 bolt diameters from each end.

3.12 REQUIRED ANCHORAGE ALONG INTERIOR BRACED WALLS

The anchorage of wall bottom plates along interior wall lines is a bit more complex than it is for exterior walls. The general rule is that when interior braced walls are supported directly on a

continuous foundation, the bottom plate of the wall must be anchored using the same bolting pattern as required for exterior walls. However, the *IRC* currently requires a continuous foundation along interior braced wall lines in only a few situations. Consequently, bolting of the sole plate of an interior braced wall to a foundation occurs only rarely because a foundation is not normally required.

When an interior braced wall frames onto a raised wood framed floor, the code is clear that the anchorage connection of the braced wall sole plate uses nails. However, the *IRC* is silent regarding exactly what kind of anchorage is required for connecting an interior braced wall to a slab-on-grade when a continuous foundation is not required and not provided. One common example is a slab-on-grade house that has its exterior walls less than 50 feet apart and therefore does not require its interior braced walls be supported on a continuous foundation. In such a case, the slab usually will not have the thickness necessary to allow installation of anchor bolts with the standard 7 inches of embedment. However, it is reasonable to assume that the braced wall bottom-plate-to-slab connection should provide lateral load resistance at least equivalent to the typical anchorage to a foundation using bolts. For the 1/2-inch diameter bolts at 6 feet on center, the bolt shear capacity from NDS Table 11E, adjusted by 1.6 for earthquake loads, ranges from 152 plf in Spruce-Pine-Fir lumber, to 176 plf in Southern Pine lumber. Therefore, the connection to be provided to the slab should provide at least the same capacity as the 1/2-inch anchor bolts. For 5/8-inch bolts at 6 feet on center, the capacity ranges from 219 plf in Spruce-Pine Fir to 248 plf in Southern Pine.

When anchor bolts cannot be used because of limited slab-on-grade thickness, interior wall bottom plates often are connected to a slab-on-grade with powder-driven nails or pins as shown in Figure 3-14. However, because of their small diameter and shallow embedment length into the slab, each powder-driven nail or pin has significantly less lateral capacity than a single 1/2-inch diameter bolt. The nails or pins would need to be spaced at a much closer center-to-center spacing to be equivalent to a 1/2-inch diameter bolt at 6 feet on center. The actual spacing needed to achieve equivalence with anchor bolts generally depends on the diameter and length of the nail or pin.

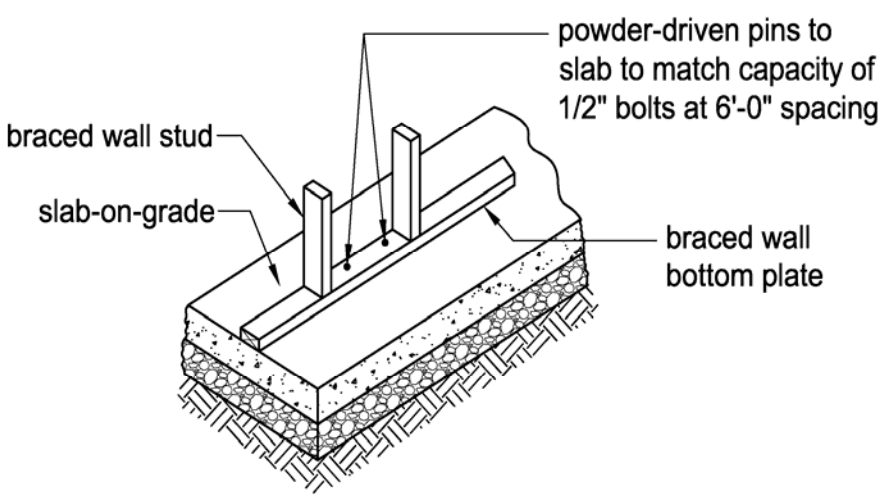

Figure 3-14 Interior braced wall on slab-on-grade.

Many manufacturers of powder-driven nails or pins have published shear and tension capacity values for their specific products when connecting wood members to concrete. However, it should be noted that powder-driven nails or pins used for this purpose generally have very little embedment depth into the concrete and, as a result, have very little tension capacity to resist the uplift that can occur at the ends of braced walls. Because of this limited tension capacity, they may not perform nearly as well as bolts. In addition, when pins are used, there is no way to install the square plate washers required on anchor bolts in SDCs D_1 and D_2 and recommended for use in SDC C.

Above-code Recommendation: In SDCs C, D_1 and D_2, when interior braced walls use wood structural panel sheathing, it is recommended that bottom plates be anchored to a thickened slab-on-grade using bolts as shown in Figure 3-5. Instead of the 18-inch thickness shown in Figure 3-5, only a minimum 10-inch thickness is necessary for the slab-on-grade to allow for 7-inch minimum embedment of the bolt and 3 inches of additional clearance from the end of the bolt to the bottom of the thickened slab.

3.13 ANCHORING OF INTERIOR BRACED WALLS IN SDCs D_1 AND D_2

In SDCs D_1 and D_2, anchor bolts are required for interior first-story walls when:

- The first-story interior wall is a bearing wall (which may or may not be a braced wall line) and it is supported on a continuous foundation.

- The interior first story-wall is a braced wall line and that wall line is required to be supported on a continuous foundation.

When applying the two rules listed above, one must differentiate between interior walls that are bearing walls and those that are braced walls. Although interior bearing walls can be braced walls, this is not always the case. Therefore, to apply the rules it must be determined that:

- An interior wall is only a bearing wall and *not* a braced wall,
- An interior wall is a braced wall but is *not* a bearing wall, or
- The interior wall is *both* a bearing wall and braced wall.

Summaries of the 2003 *IRC* minimum requirements for continuous foundations and for installing anchor bolts to a foundation along braced wall lines and bearing walls are presented in Tables 3-1 and 3-2, respectively. When an interior wall is both a bearing wall and a braced wall, the most restrictive requirement from Tables 3-1 and 3-2 applies.

Table 3-1 Summary of 2003 *IRC* Continuous Foundation and Anchor Bolt Requirements for Braced Wall Lines in One- and Two-family Houses

Seismic Design Category	Continuous Foundation Required At Braced Wall Lines	Anchor Bolts Required	Anchor Bolt Diameter Spacing
A, B and C	YES along Exterior Braced Walls	YES	½" @ 6'-0"
A, B and C	NO along Interior Braced Walls	NO	N/A
D_1	YES along Exterior Braced Walls	YES[1]	½" @ 6'-0" ½" @ 4'-0" >2 story
D_1	NO along Interior Braced Walls Unless wall lines spaced > 50 feet	NO	N/A
D_2	YES along Exterior Braced Walls	YES[1]	½" @ 6'-0" [3]
D_2	NO along Interior Braced Walls of 1 Story unless spaced > 50 feet	NO	N/A
D_2	YES along Interior Braced Walls of Two-Story[2]	YES[1, 2]	½" @ 6'-0" [3]

[1] Requires a square plate washer 3 x 3 x ¼ inch on each bolt.
[2] A continuous foundation is NOT required for interior braced wall lines of a two story building in SDC-D_2, provided that all of the following conditions are met: A) The spacing between continuous foundations does not exceed 50 feet, B) cripple walls (if provided) do not exceed 4 feet in height, C) first story braced walls are supported on beams double joists or blocking, and D) braced wall line spacing does not exceed twice the building width measured parallel to the braced wall line.
[3] Buildings are limited to two-story in SDC D_2, therefore anchor bolts at 4'-0" on center spacing do not apply.

Table 3-2 Summary of 2003 *IRC* Continuous Foundation and Anchor Bolt Requirements for Bearing Walls in One- and Two-family Houses

Seismic Design Category	Continuous Foundation Required At Bearing Walls	Anchor Bolts Required	Anchor Bolt Diameter Spacing
A, B and C	YES along Exterior Walls	YES	½" @ 6'-0"
A, B and C	NO along Interior Bearing Walls	NO	N/A
D_1	YES along Exterior Walls	YES[1]	½" @ 6'-0" ½" @ 4'-0" >2 story
D_1	YES along Interior Bearing Walls supported on a slab-on-grade	YES[1]	½" @ 6'-0" ½" @ 4'-0" >2 story
D_1	NO along Interior Bearing Walls supported on a raised floor	NO	N/A
D_2	YES along Exterior Walls	YES[1]	½" @ 6'-0" [2]
D_2	YES along Interior Bearing Walls supported on a slab-on-grade	YES[1]	N/A
D_2	NO along Interior Bearing Walls supported on a raised floor	NO	N/A

[1] Requires a square plate washer 3" x 3" x ¼" on each bolt.
[2] Buildings are limited to two-story in SDC D_2, therefore anchor bolts at 4'-0" on center spacing do not apply.

Chapter 4
FLOOR CONSTRUCTION

Woodframe floor systems and concrete slab-on-grade floors are discussed in this chapter. Although cold-formed steel framing for floor systems also is permitted by the *IRC*, it is not covered here; rather, the reader is referred to the AISI *Standard for Cold-Formed Steel Framing – Prescriptive Method for One- and Two-Family Dwellings* (AISI, 2001) for guidance. Also permitted but not discussed here are pressure-treated wood floor systems on ground; information on the use of these systems is provided in *IRC* Chapter 5.

4.1 GENERAL FLOOR CONSTRUCTION REQUIREMENTS

Woodframe floor systems form a horizontal diaphragm at each level where they occur and transfer earthquake lateral loads to braced walls below that floor level or directly to the foundation when the lowest floor is supported on a foundation. When a floor supports walls above and is supported on walls below as shown in Figure 4-1, the lateral loads in the floor system are based on the mass of the floor itself and a portion of the mass of all the walls in the stories immediately above and below the floor. (See Chapter 2 of this guide for a discussion of the complete load path.)

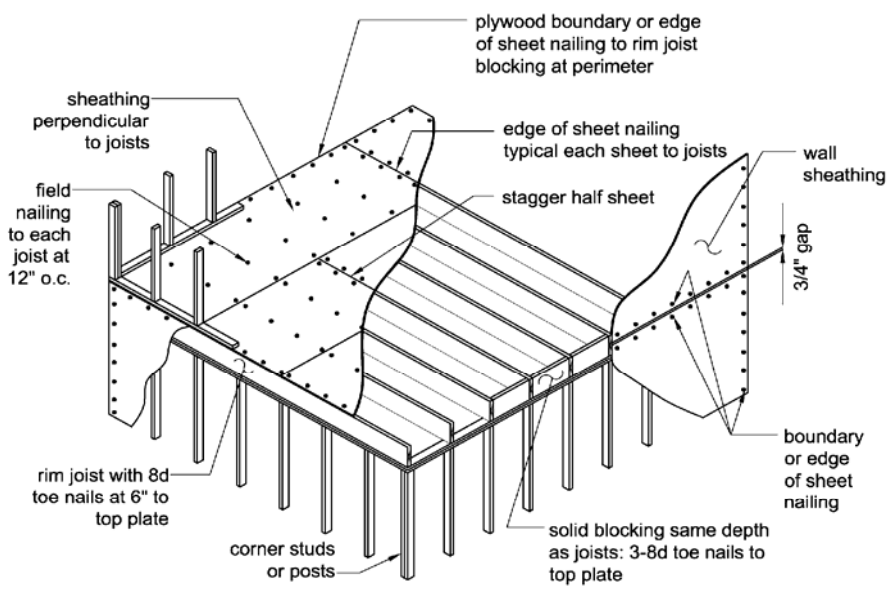

Figure 4-1 An unblocked floor diaphragm.

Concrete slab-on-grade floors typically are constructed with a concrete perimeter foundation and together these elements form the base of the building. Lateral forces from exterior and interior braced wall lines are transferred to a slab-on-grade via connections between the bottom plate of a braced wall and the slab. In turn, the concrete slab and foundation transfer those forces directly to the ground as shown in Figure 4-2. (For more information on anchorage of braced walls to slab-on-grade construction, see Chapter 3 of this guide.)

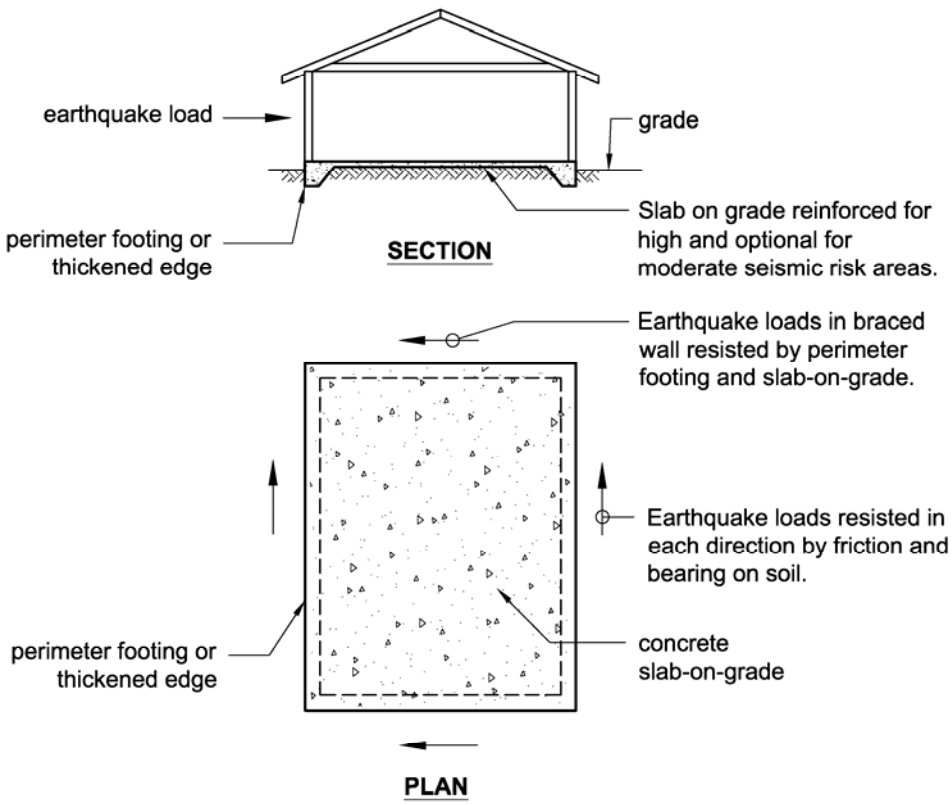

Figure 4-2 Slab-on-grade and perimeter footing transfer loads into soil.

4.2 WOODFRAME FLOOR SYSTEMS

Woodframe floors typically consist of repetitive joists or trusses, at a prescribed spacing, sheathed with either boards or wood structural panels attached to the top surface. Finish materials such as gypsum board typically are applied to the bottom surface where it serves as the ceiling for a room below. Blocking between joists or trusses is used at the ends of the floor joists or trusses (or a continuous band joist can be used at the ends) and where walls occur above or below. Floor systems also include beams, girders, or headers where needed to support joists. Joists can be sawn lumber, end jointed lumber, or a variety of prefabricated (engineered) members. Examples of engineered lumber include wood I-joists, trusses, and solid rectangular structural composite members such as parallel strand lumber (PSL), laminated veneer lumber (LVL), and laminated strand lumber (LSL). Beams, girders, or headers and blocking also can be either sawn lumber or engineered lumber.

The primary design consideration in choosing the minimum size and the maximum span and spacing of floor joists, trusses, beams, girders, and headers is adequate support for dead and live vertical loads as prescribed by the code depending on the uses that a floor must support. Vertical deflection of a floor is another design consideration that can limit the maximum span of floor members. Tables in *IRC* Chapter 5 and similar tables in other documents such as those published by the American Forest and Paper Association (AF&PA) or engineered lumber manufacturers are available for use in selecting the proper combination of minimum size and maximum span and spacing of floor framing members.

4.3 CANTILEVERED FLOORS

When floor joists cantilever beyond a support, joist size and spacing are limited by prescriptive tables in *IRC* Chapter 5. *IRC* Table R502.3.3(1) addresses support of a roof and one story of wall for roof spans up to 40 feet and snow loads up to 70 psf. *IRC* Table R502.3.3(2) addresses cantilever joists supporting an exterior balcony. When a floor is supporting more than a roof and one story of wall, the maximum prescriptive cantilever distance is limited by the *IRC* to the depth of the joist. If longer cantilevers are desired, a registered design professional must design that portion of the floor system.

In Seismic Design Categories D_1 and D_2, when cantilevered floor joists support braced wall panels in the story above, the cantilevered floor is limited by several additional prescriptive requirements in *IRC* Chapter 3. This is because the braced wall above and braced wall below are offset out-of-plane. When a floor cantilever supporting a braced wall does not meet the *IRC* limits, that portion of the house is defined as having an irregularity that prevents the use of prescriptive wall bracing where the irregularity occurs. In such a case, engineering must be applied to resolve the out-of-plane offset of the braced walls located in the stories above and below that floor. The maximum permitted cantilever of a second floor supporting a braced wall and roof is illustrated in Figure 4-3. (Also see the discussion of load path in Chapter 2 of this guide.)

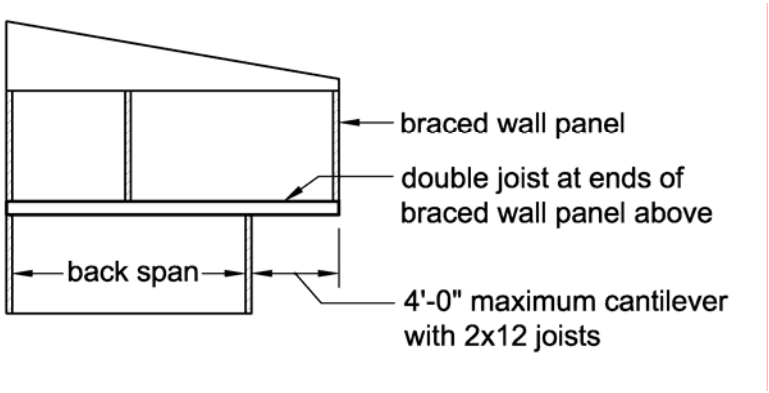

Figure 4-3 Cantilevered floor restrictions.

The specific limits and requirements in *IRC* Chapter 3 for cantilevered floors in SDCs D_1 and D_2 that support braced walls are not particularly difficult to meet and appear to omit addressing the uplift restraint that may be necessary at the back span support of cantilever joists. In SDCs D_1 and D_2, cantilever floor joists supporting a braced wall panel may not extend more than four times the nominal depth of the joist when the following set of rules is met:

- Joists must be 2x10 nominal or larger at 16-inch maximum spacing.
- The back span of the cantilever joist must be at least twice the cantilever distance.
- Joists must be doubled at the ends of the braced wall panel above.
- A continuous rim joist is connected to the end of each cantilevered joist. If that rim joist is spliced along its length, the splice must be made with either: (a) a 16-gage strap having 6 – 16d common nails on each side of the splice or (b) by using wood blocking having the same size as the rim joist, installed between the cantilevered joists, and nailed to the rim with 8 –16d common nails on each side of the splice.
- The cantilever end of the joist is limited to supporting uniform loads from a roof and wall above and, if supporting a header above, the header span is limited to 8 feet.

These rules are illustrated in the framing plan shown in Figure 4-4. What is not mentioned in this list of rules is the need for connections to resist uplift at the back-span (interior) end of a cantilever joist as noted in Figure 4-4. In *IRC* Table R502.3.3(1) for cantilever joists supporting a roof and wall, the uplift is determined using a back-span distance that is three times the cantilever distance (3:1). Because the minimum back span specified in the *IRC* Chapter 3 (see Item 2 above) is only twice the cantilever distance (2:1), the uplift values in *IRC* Table R502.3.3(1) would need to be increased by a factor of 1.5 just to address the gravity loads.

When the downward earthquake overturning load from the ends of a braced wall panel supported by cantilever joists are considered in addition to gravity loads, the uplift load at the back-span end of the joist obviously will increase. Therefore, depending on the actual back-span-to-cantilever-length ratio, the back-span end of the double cantilever joists supporting the ends of a braced wall may need to provide uplift restraint as much as twice than that listed in *IRC* Table R502.3.3(1). However, because the magnitude of the uplift load at the back-span end of a cantilevered joist reduces as the back-span length increases, it is possible that a cantilever joist that is continuous over its interior support will result in zero uplift at the back-span end. When cantilever joists are continuous over an interior support, the back span increases and the uplift at the end of the joist is greatly reduced. Therefore, the specific cantilever floor joist layout and ratio of the length of the back span to the cantilever will determine if and how much uplift may need to be resisted.

Above-code Recommendation: In SDCs C, D_1 and D_2, when a braced wall is supported at the ends of cantilever joists, the back-span uplift connection capacity should be determined using engineering principals for the specific back-span and cantilever distances involved.

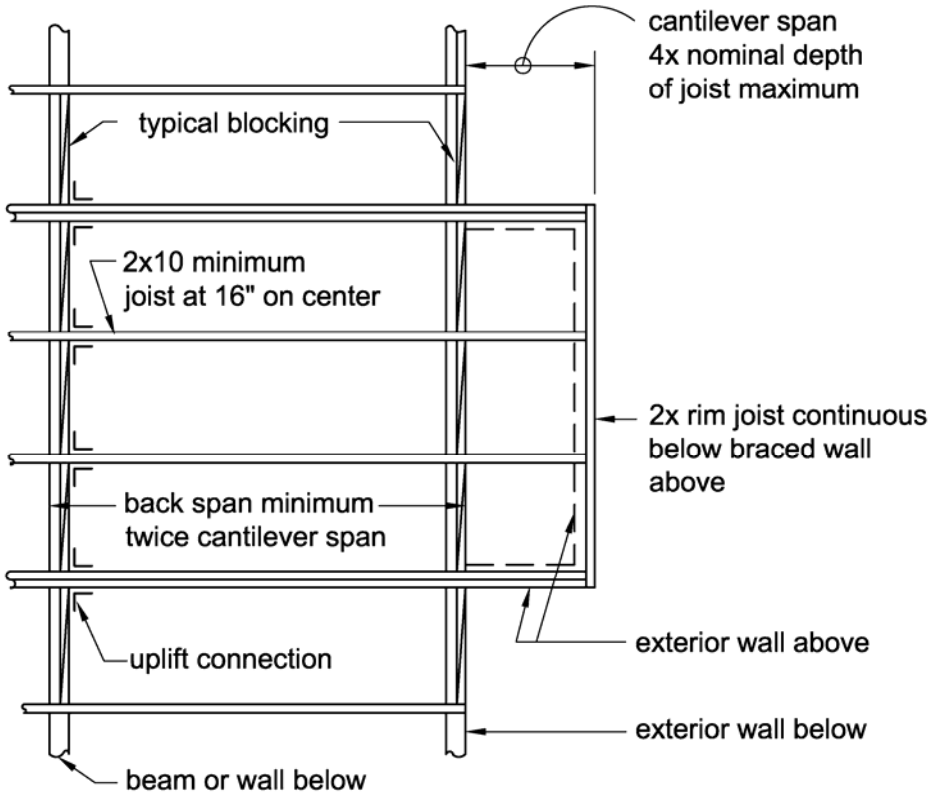

Figure 4-4 Cantilever joist at braced wall above.

4.4 REQUIREMENTS FOR BLOCKING

It is important in floor framing construction to prevent joists (or trusses) from rotating or displacing laterally from their intended vertical position. Rotation loads occur because, when floor sheathing is resisting lateral loads oriented perpendicular to the joist, those lateral loads are actually trying to move the top edge of the joist sideways.

Preventing rotation is often accomplished by installing full-depth solid blocking at the ends of joists. The ends of joists also can be restrained by attaching the joist to a continuous rim or band joist or a header or, in balloon framed walls, by attaching the joist to the side of a stud. In SDCs D_1 and D_2, additional solid blocking between joists (or trusses) is necessary at each intermediate support even when that location is not at the end of the joist. For example, intermediate support should be located at an interior girder or bearing wall where joists are continuous over that support. Blocking installed between joists supported by an interior floor girder is illustrated in Figure 4-5.

Blocking also is required below an interior braced wall line in all Seismic Design Categories when joists are perpendicular to the braced wall. Although the *IRC* is silent regarding minimum

depth and width for these blocks, the intent of this added blocking is to provide a nailing surface for the 16d common nails used to connect the bottom plate of the braced wall to the floor. This nailing is an important part of the lateral load path; therefore, the blocking should be of a depth sufficient to allow full embedment of the 16d common nails and of sufficient width to prevent the nails from missing the block.

Assuming floor sheathing is at least 1/2- inch thick, the minimum depth of the blocking should be 1-1/2 inches. Therefore, a flat 2-inch by 4-inch block as shown in Figure 4-6 can provide sufficient depth and, when accurately placed below a wall, can provide a width that greatly reduces the potential for bottom plate nails missing the block.

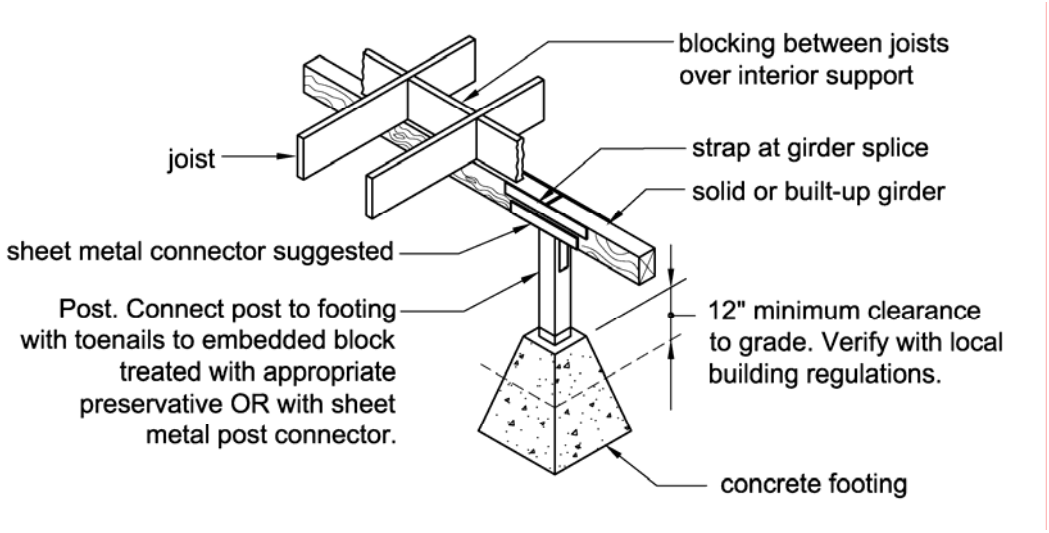

Figure 4-5 Interior bearing line.

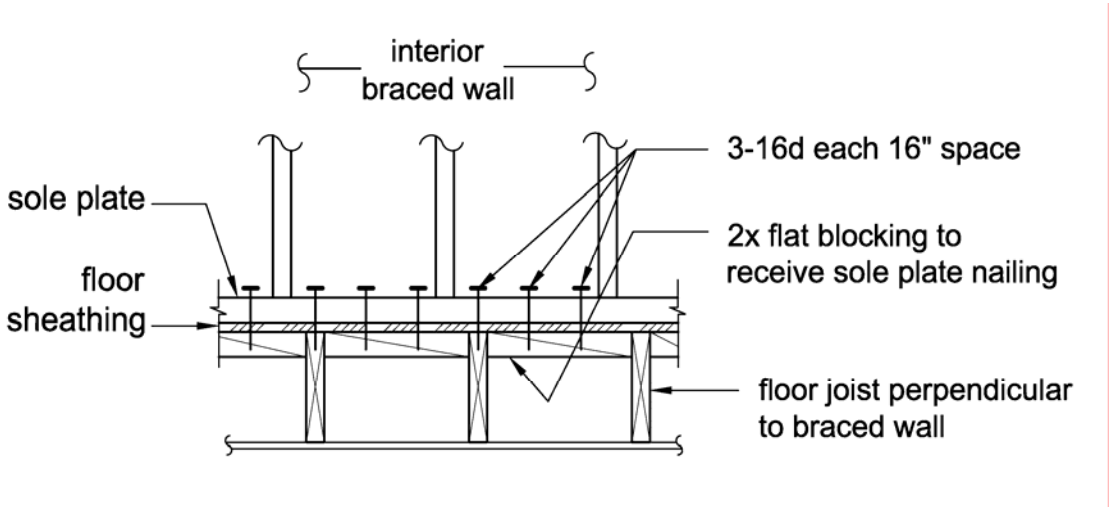

Figure 4-6 Blocking below interior braced wall where floor joists are perpendicular to wall.

When an interior braced wall also is a bearing wall and joists below the wall are parallel to the wall, a double joist or a beam typically is provided in the floor below the wall. Occasionally this pair of joists may be spaced apart to allow for piping or vents passing vertically from the wall above through the floor. When this occurs, the double joists cannot be located directly below the wall's bottom plate. To provide a nailing surface for the bottom-plate connection of the braced wall above, 2x flat blocking should be installed in line with the braced wall's bottom plate between and parallel to these spaced joists as shown in Figure 4-7.

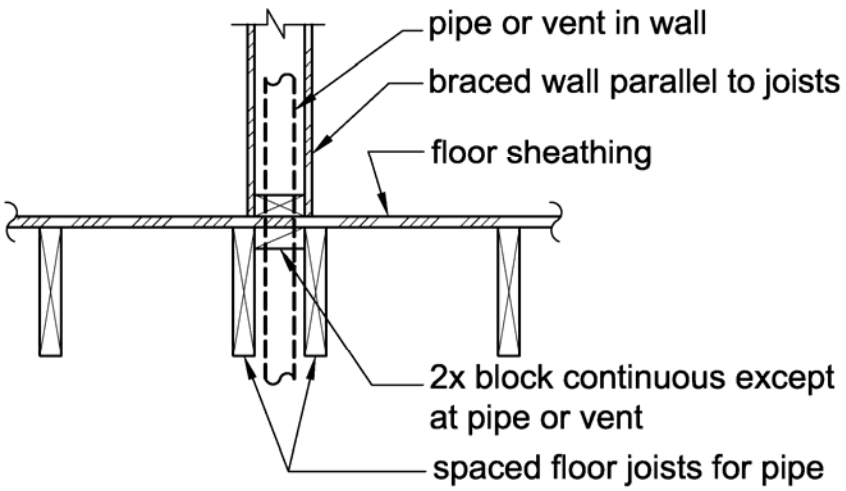

Figure 4-7 Blocking for floor joists spaced apart for piping in floor.

4.5 CONNECTION OF FLOOR JOISTS TO WALL TOP PLATE OR FOUNDATION SILL PLATE BELOW

Floor joists (or trusses) are required to be connected to the top plate of supporting walls or to a foundation sill plate as specified in *IRC* Table R602.3(1). Each of these connections provides a load path to transfer loads from the floor diaphragm into the braced walls or the foundation below. Nailed connections must meet the following minimum requirements:

- Rim or band joists parallel to a wall or foundation require a toe-nailed connection to the wall top plate or foundation sill plate using 8d box or common nails at 6 inch spacing.

- Floor joists perpendicular to a wall top plate or foundation sill plate require a toe-nailed connection using three 8d box or common nails.

- When blocking is installed between the floor joists, the blocking requires a toe-nailed connection to the wall top plate or foundation sill plate using a minimum of three 8d box or common nails in each block.

Where toe nailing is used, it must be done correctly so that it can transfer the intended loads and so that the nails do not split the wood when being installed. Toe-nailed connections prescribed by the *IRC* should be acceptable when connecting joists to wall top plates or foundation sills that are perpendicular to the joists because these connections are not highly loaded by lateral loads. The primary lateral load transfer in a floor system occurs through the rim or band joists and through blocking that is parallel to braced walls or foundation sill plates.

Information on proper toe-nail installation is presented in Figure 4-8; however, that idealized picture of nail inclination and location is difficult to achieve in actual construction. Consequently, many toe-nailed connections that must transfer lateral loads may not actually perform very well.

Above-code Recommendation: In SDCs C, D_1 and D_2, connections between joists or blocking and wall top plates or foundation sill plates that are parallel to the joist or blocking should use commercially available light-gage steel angles and nails of the correct diameter and length for the product. Many of the toe-nailed connections specified in the *IRC* also can be made using light-gage steel angles through which face nails are driven into the two wood framing members being connected. Although light-gage angles may require more time to install than toe nails, the angle connections should reduce splitting of the wood and can provide a more reliable connection capacity for lateral loads compared to toe nails.

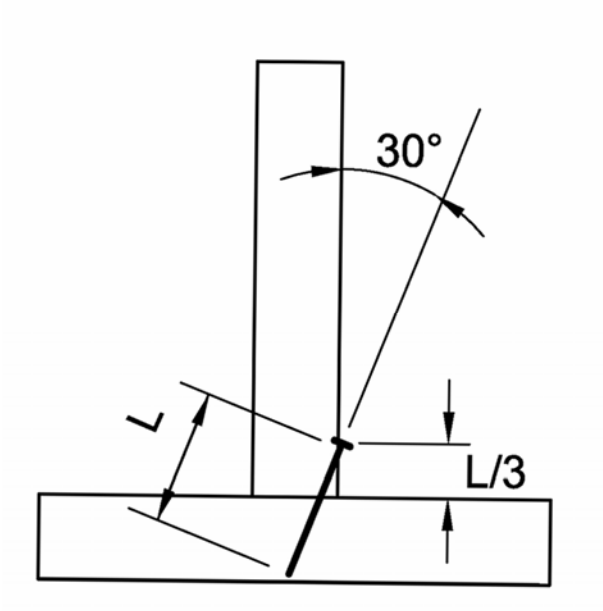

Figure 4-8. Toe nail configuration requirements.

4.6 FLOOR SHEATHING

Floor sheathing can be either wood boards installed perpendicular or diagonally to the joists or wood structural panels (as subfloor or combination subfloor-underlayment) installed with the long direction of the panel perpendicular to the joists. The minimum thickness for wood board sheathing depends on joist spacing and the orientation of the boards to the joist (e.g., perpendicular or diagonal). For wood structural panels, the minimum thickness is based on joist spacing and the grade of sheathing panels selected. *IRC* Chapter 5 contains tables to use in determining the required minimum thickness for sheathing materials based on a variety of joist spacings.

Above-code Recommendation: Wood boards are rarely used in modern house construction unless the underside of the floor is intended to be visible to the interior space below to achieve a specific architectural effect. **As an above-code measure, wood boards installed perpendicular to joists should not be used in SDC C, D_1, or D_2 unless wood structural panels are installed over the boards because the wood board sheathing alone provides little resistance to lateral loads**. In contrast, diagonally placed wood boards provide greater lateral capacity and should be acceptable for small rectangular-shaped floor areas.

For modern construction, floor sheathing typically will be wood structural panels (OSB or plywood). These panels are fastened to the joists based on a schedule prescribed in tables in *IRC* Chapter 6.

4.7 LATERAL CAPACITY ISSUES FOR WOOD FRAMED FLOORS USING WOOD STRUCTURAL PANELS

The lateral capacity of a floor diaphragm sheathed with wood structural panels is based on five factors:

- Sheathing thickness,
- Sheathing fastener type and size,
- Fastener spacing along supported sheathing edges,
- Presence or absence of blocking along all edges of each piece of sheathing, and
- Layout of the sheathing joints with respect to direction of lateral loading.

Below is a discussion of how differences in lateral capacity can result depending on how each of these is applied to the construction of a floor.

Sheathing thickness usually is selected based on the spacing of joists and, for floors, will never be less than 7/16 inch but normally is at least 5/8 inch. Generally, thicker sheathing will provide a more comfortable floor for the occupants to walk on and will have a greater lateral capacity compared to thinner sheathing using the same fastener size and spacing.

The most common sheathing fasteners used are nails with a minimum size of 6d common (0.113 inch x 2 inches) for a floor sheathing thickness of up to 1/2 inch. The minimum fastener size

increases with increasing sheathing thickness to a minimum of 10d common nails (0.148 inch x 3 inches) for sheathing that is 1-1/8 inches thick. Larger diameter nails will provide greater lateral capacity than smaller nails in the same thickness of sheathing because the lateral capacity of a nail is directly proportional to its diameter. Therefore, using box nails or gun nails that have a smaller diameter than common nails will reduce the lateral capacity of a floor diaphragm.

Staples also can be used to fasten sheathing to framing members. Although not commonly used, *IRC* Table R602.3 (2) has information for specifying alternative sheathing fasteners including staples. Generally, staples of either 15 or 16 gage can be used in place of most nails at the same spacing as those nails. However, when using staples, it is important to understand that they must be installed with the crown parallel to the framing member below the sheathing edge being fastened.

Fastener spacing for floor sheathing is typically 6 inches along continuously supported panel edges and 12 inches along supporting members not located at panel edges. Greater lateral capacity can be obtained when fastener spacing along supported edges is reduced from 6 inches to 4 or 3 inches.

The *IRC* only requires floor diaphragms to be fastened along continuously supported panel edges. This includes where panel edges are located parallel to and over a joist and at the floor framing members forming the perimeter of the floor. The unsupported panel edges that are spanning perpendicular to the joists only need to be fastened at each joist. In engineering terms, this is called an unblocked diaphragm. See Figure 4-1 for the sheathing layout and nailing pattern for a portion of an unblocked diaphragm.

In contrast, a fully blocked floor diaphragm means that all edges of each sheathing panel that are not located on a joist are supported on and fastened to blocking. A blocked diaphragm will have significantly greater lateral capacity than an unblocked diaphragm having the same thickness of sheathing and attached with identical fasteners because the extra fasteners along the blocked edges provide additional capacity. Figure 4-9 shows the layout of sheathing and nailing of a portion of a blocked floor diaphragm. Fastening the sheathing to joists or blocking along all panel edges allows the shear loads being carried in the sheathing to be transferred from one panel to the next much more effectively. This, in turn, ties the floor together better and allows the braced walls below that floor to resist an earthquake more as a system than as individual walls.

Above-code Recommendation: The *IRC* requires that wood structural panel sheathing be installed with the long dimension of the panel perpendicular to joists, but it does not specify staggering of panel joints along the short direction of the panels. **Although not specifically required by the *IRC*, sheathing should be installed as shown in Figures 4-1 and 4-9 to achieve the greatest capacity**. This staggered sheathing layout pattern causes the individual sheathing panels to interlock and makes the whole floor act as a unit.

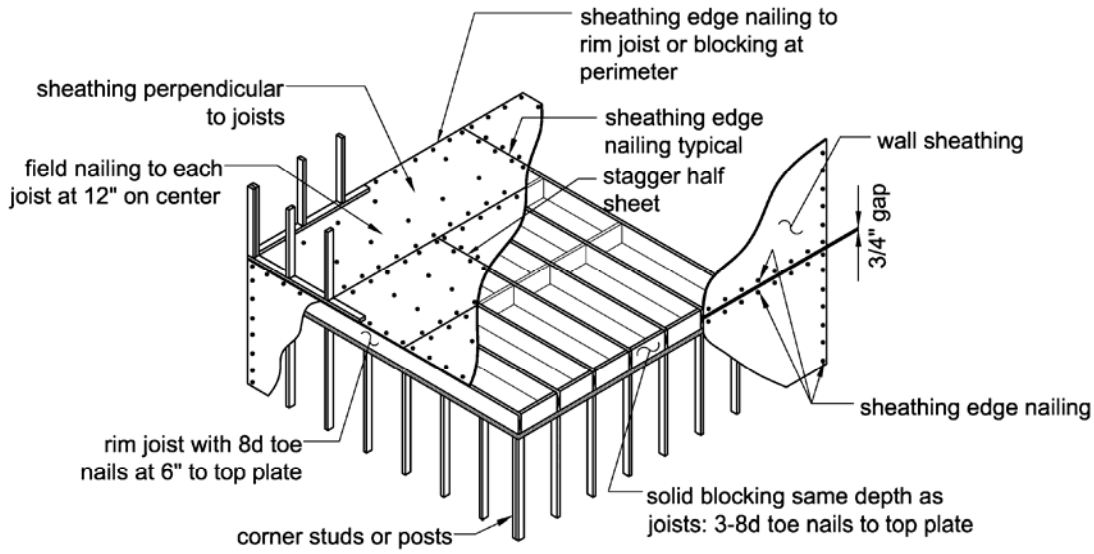

Figure 4-9 Blocked diaphragm configuration.

Lateral loads in a floor diaphragm also are affected by the distance between braced wall lines or between foundations located below the floor. The loads increase with increasing distance between lines of parallel braced walls or foundations. Therefore, a long and narrow floor diaphragm as shown in Figure 4-10 will have to transfer a greater load per foot along its short sides than along its long sides. In order to limit the maximum load along a short side, *IRC* Chapter 6 places limits on the maximum spacing between braced wall lines or foundations.

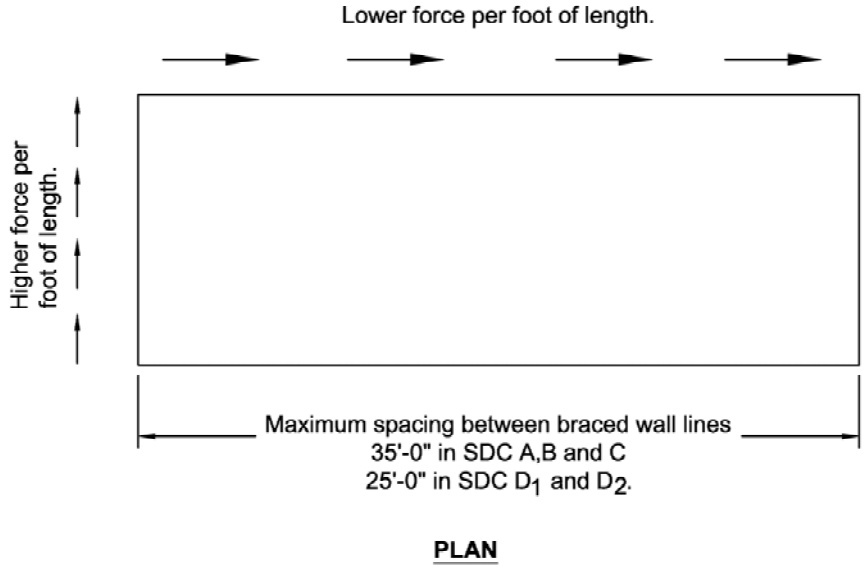

Figure 4-10 Diaphragm loads on long and short sides.

The size and location of floor openings such as for stairs or a two-story entry foyer can create concentrations of lateral loads in a floor diaphragm. To address this, *IRC* Chapter 3 limits openings through a floor or roof to the lesser of either 12 feet maximum or 50 percent of the least dimension of the floor. When openings exceed these limits, engineering of the floor or roof diaphragm is required.

Above-code Recommendation: In SDCs C, D_1 and D_2, when floor openings exceed 50 percent of the *IRC* prescriptive opening size limits, it is recommended that 16-gage straps be installed along the edges perpendicular to the joists and extended beyond the opening by at elast 2 feet at each end as shown in Figure 4-11. The straps can be nailed with 10d nails into the framing members forming the perimeter of the opening and into blocking beyond the corners. The straps and additional nailing act to reinforce the diaphragm and provide a dedicated path for lateral loads to be transferred around the opening to the portions of the floor beyond. Smaller openings such as those for chimneys or duct shafts do not require any special reinforcing.

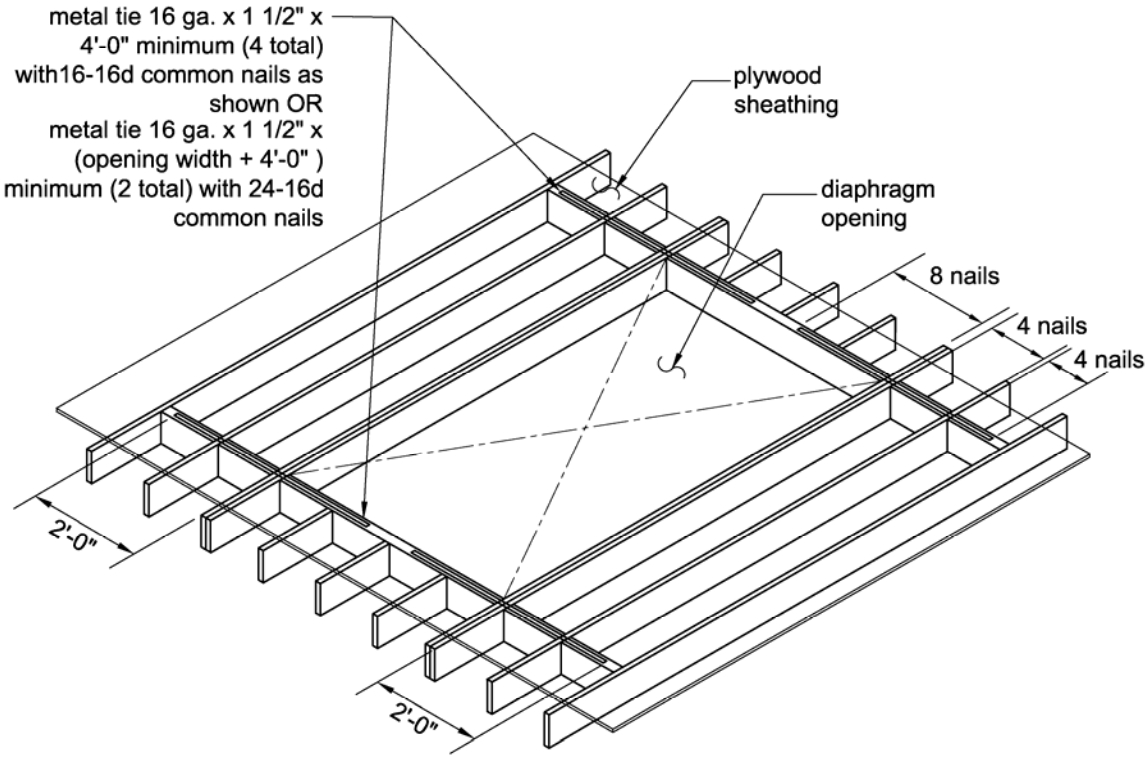

Figure 4-11 Reinforcing straps at large diaphragm openings.

4.8 CONCRETE SLAB-ON-GRADE FLOORS

A concrete slab-on-grade can be used as the base of a first-floor level or of a basement level. The minimum thickness for a concrete slab-on-grade is 3-1/2 inches except where expansive soil is present. Where expansive soils are encountered, a design for the slab-on-grade must conform to *IBC* Chapter 18 (see Chapter 3 of this guide for a discussion of the effects of expansive soil).

Concrete Strength Requirements – The minimum concrete compressive strength is 2,500 pounds per square inch (psi). Floor slabs having an exterior surface exposed to the weather in areas of moderate to severe concrete weathering must have higher compressive strength as specified in *IRC* Table R402.2. A map in *IRC* Chapter 3 identifies locations where moderate and severe weathering of concrete is expected to occur.

Reinforcing of Concrete Slab-on-Grade Floors – In the absence of expansive soils, the *IRC* does not require reinforcing of concrete slabs. Reinforcing typically is used to provide tension capacity in concrete and thereby reduce cracking caused by a variety of loads including temperature variations. Concrete alone has very good compression capacity but has a very low capacity for tension. Therefore, adding reinforcing bars to a slab-on-grade will provide much greater resistance to tension loads originating from earthquake loads and other soil conditions that could induce tension stress in the slab.

Reinforcing is required only where a slab-on-grade is thickened along its perimeter edge or below an interior bearing wall in SDCs D_1 and D_2. When exterior braced walls are spaced more than 50 feet apart, an interior braced wall also needs a foundation as part of the slab-on-grade in SDCs D_1 and D_2. (See Chapter 3 of this guide for information on where and how much reinforcing is needed in foundations provided with a slab-on-grade.)

Above-code Recommendation: When a slab-on-grade is placed separately from the perimeter footing below, the *IRC* does not specify any vertical reinforcing across this joint. When this condition occurs, the possibility of earthquake loads causing sliding along that joint is very real. **Therefore, as an above-code measure in SDCs C, D_1 and D_2, when the footing and the slab concrete are separately placed, it is recommended that vertical reinforcing dowels be placed across the joint between the slab and footing. These vertical dowels should be No. 4 steel reinforcing bars at 48-inch maximum spacing.** (More information on this subject is presented in Chapter 3 of this guide.)